OWNER/OPERATOR'S MANUAL & PARTS LIST

ET200

TURBINE BLOWER

Get Attached... Get it DONE!!!

Revised 08/22/12
09.10006

Orrville, OH

www.ventrac.com

TO THE OWNER

Product Identification

If you need to contact an Authorized Ventrac Dealer for information on servicing your product, always provide the Product Model and Serial numbers.

Please fill in the following information for future reference. See picture below to find the location of the identification number. Record them in the spaces provided below.

Date of Purchase: Month _____ Day _____ Year _____

Dealer: _____

Dealer Address: _____

_____

Dealer Phone Number: _____

Dealer FAX Number: _____

Model # (A): _____

Serial # (B): _____

Affix Part/Serial Number label here

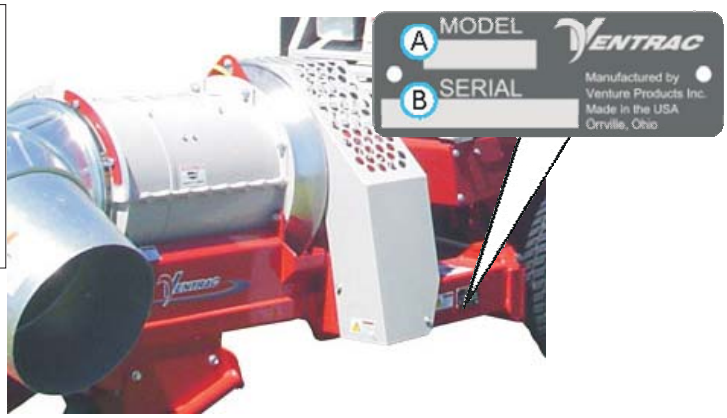

Venture Products Inc. reserves the right to make changes in design or specifications without obligation to make like changes on previously manufactured products.

TABLE OF CONTENTS

INTRODUCTION — SECTION A

Description and Specifications A-1

SAFETY — SECTION B

Safety Symbols B-1
Decals . . . . . B-2 & 3
General Safety Procedures B-4
Safety Operation & Techniques B-5

SETUP & OPERATION — SECTION C

Attaching C-1
Detaching C-1
Operating Tips C-2

MAINTENANCE/ADJUSTMENTS — SECTION D

Maintenance D-1
Adjustment D-2

PARTS & ILLUSTRATED DRAWINGS — SECTION E

Main Frame & Blower Drive . . . . . E-1 & 2
Shields, Stand, & Wheel Mount . . . . . E-3 & 4
Hydraulic Motor . . . . . E-5 & 6
Blower Mount & Discharge Nozzle . . . . . E-7 & 8

WARRANTY

INTRODUCTION

Product Description
ET200 Turbine Blower

The ET200 Turbine Blower is designed to blow a large volume of air using a radial fin turbine design. Because of this design, the Turbine blower is much quieter than a conventional leaf blower. It can be used effectively to blow leaves, light snow, and debris from sidewalks, parking lots and other areas requiring debris removal. It can also be used to remove standing water and to dry wet surfaces.

Blower Features:

- Minute-Mount™ hook up
- 360 degree continuous nozzle rotation
- Nozzle rotation is hydraulicly controlled from the tractor seat
- Easy connect hydraulic quick couplers
- Single front caster wheel to provide smooth ground contour transitions
- Front bumper to protect the nozzle from being damaged
- Adjustable Jackstand for easy attaching and detaching

Ventrac ET200 Specifications

Overall Height	34 inches (86.5 cm)
Overall Length	76 inches (193 cm)
Overall Width	27 inches (68.5 cm)
Weight	250 pounds (113.5 kg)
Nozzle Size	12-1/2” (32 cm)
Wind Speed at nozzle	125 mph (201km/h)

ATTENTION:

This symbol identifies potential health and safety hazards. It marks safety precautions. Your safety and the safety of others is involved.

SIGNAL WORD DEFINITIONS

⚠ DANGER

Indicates an imminently hazardous situation which, if not avoided, will result in death or serious injury. This signal word is limited to the most extreme cases.

⚠ WARNING

Indicates a potentially hazardous situation which, if not avoided, could result in death or serious injury.

⚠ CAUTION

Indicates a potentially hazardous situation which, if not avoided, may result in minor or moderate injury and/or property damage. It may also be used to alert against unsafe practices.

The following decals must be maintained on your Ventrac turbine blower. If any decals are faded or missing, contact your dealer promptly for replacements.

A

B

C

D

E

F

G

H

Decal	Page & Location	Description	Part Number
A	E-1, #29	Danger - Shield Missing	00.0062
B	E-1, #36 E-3, #26	Warning - Do Not Reach	00.0219
C	E-3, #16 (2)	Warning Moving Parts	00.0216
D	E-3, #23	Read Owners Manual	00.0217
E	E-3, #24	General Safety	00.0220
F	E-7, #17	America & Safety First	07.22103
G	E-7, #18	Warning - Eye Protection	07.22107
H	E-7, #19	Warning - Ear Protection	07.22106

General Safety Procedures for Ventrac Tractors, Attachments, & Accessories

Read and understand the operator's manual before operating this equipment.

Observe and follow all safety decals.

DO NOT let children or any untrained person operate the tractor or attachment. Make sure that all operators of this equipment are thoroughly trained in using it safely.

Never allow additional riders on the tractor or attachments.

DO NOT operate tractor or attachments if you are under the influence of alcohol, drugs, medication that may impair judgment or cause drowsiness, or if you are not feeling well.

Operate all controls from the operator's seat only.

Before operating equipment, make sure all shields are in place and fastened.

Ensure the attachment or accessory is locked or fastened securely to the tractor before operating. See tractor manual for locking procedure.

Ensure that all bystanders are clear of the tractor and attachment before operating. Be especially careful and observant if other people are present. Never assume that bystanders will remain where you last saw them.

Always look in the direction the tractor is moving.

Never direct the discharge of any attachment in the direction of people, animals, buildings, vehicles, or objects of value.

Immediately stop at any sign of equipment failure and correct the problem before continuing to operate. An unusual noise can be a warning of equipment failure.

Before adjusting, cleaning, lubricating, or changing parts on the tractor or attachment, engage the parking brake, lower the attachment to the ground, stop the engine, and remove the ignition key.

To prevent the risk of uncontrolled equipment movement on tractors equipped with 2 speed axles, always shift the transaxle range with the tractor stationary on level ground and with the parking brake engaged.

If equipment is to be left unattended, stop the engine, remove the key, and make sure the parking brake is engaged.

ET200 Safety Procedures

⚠ WARNING

Before making any repairs or adjustments, lower attachment to the ground, set parking brake, shut the engine off, and remove the key.

⚠ WARNING

Read and understand the operator's manual before operating this equipment.

- Read and understand the owner's manual before attempting to operate this machine.
- Do not allow children or untrained persons to operate this machine.
- Before operating, inspect the blower for any loose bolts, damage to any part and that all shields are fastened in place.
- Never attempt to clean out the blower, adjust belts, repair or maintain any part with the tractor running.
- Before leaving the operator seat disengage the PTO drive, engage parking brake, stop engine, and remove the key.
- Always store with the blower nozzle turned down to prevent debris from entering the blower.
- All bystanders and pets should be kept a safe distance (150 feet is a general guideline) away when the blower is in operation. Never direct the nozzle towards people, pets or property of value.
- Wear appropriate ear protection for prolonged exposure to excessive noise.
- Wear eye protection.

Operating Instructions

Attaching:

1. Drive the tractor forward slowly into the hitch arms on the turbine blower. Align the hitch arms of the tractor with the hitch arms on the blower by raising or lowering the tractor hitch arms. Because the blower is resting on a castor wheel and may roll away from the tractor, it may be necessary to manually push it onto the tractor hitch arms to complete the engagement.
2. Once completely engaged, close the front hitch latch.*
3. Shut off the tractor engine and engage the parking brake.*
4. Place attachment belt over the outside groove of the PTO drive pulley on the tractor. Ensure the belt is properly seated in each pulley.
5. Engage the PTO spring tension lever.*
6. Wipe hose ends clean, and connect to the tractor's hydraulic quick couplers. If equipped, connect the hoses and quick couplers so the red indicators are paired together and the yellow indicators are paired together.
7. Raise the jack stand to it's highest position and install the latch pin.

Detaching:

1. Park the tractor on a level surface and engage the parking brake.*
2. Rotate the turbine blower outlet nozzle so that it is pointing down.
3. Lower the turbine blower so it is resting on the ground.
4. Shut off the tractor.
5. Slowly release the PTO spring tension lever.*
6. Remove the attachment belt from the PTO drive pulley of the tractor.
7. Move the aux. control lever* back and forth several times to equalize hydraulic pressure in the quick coupler hoses.
8. Disconnect the attachment quick coupler hoses from the tractor.
9. Lower the jack stand to the lowest position possible and install the latch pin.
10. Disengage the front hitch latch.*
11. Restart the tractor and slowly back away from the turbine blower.

**Refer to tractor manual for operation of controls*

⚠ WARNING

USE CAUTION WHEN OPERATING NEAR OBJECTS WHICH MAY ROLL OR TIP FROM THE HIGH WIND VELOCITY OF THE BLOWER, SUCH OBJECTS CAN CRUSH OR INJURE PERSONS OR PETS.

FLYING DEBRIS CAN ALSO CAUSE INJURY TO PERSONS AND DAMAGE TO BUILDINGS, AUTOS, ETC.

Operating Tips and Techniques:

- The Front Lift* lever controls lift of the blower. Normal operation requires the lever to be in the Float* position.
- The Auxiliary Hydraulic Lever* controls the direction of the Nozzle. It rotates in a continuous 360 degree rotation. With the nozzle in the down position the airflow is directed forward.
- Apply the Weight Transfer System* (if applicable) when the blower is in operation. This will decrease the weight of the blower on the front caster wheel, making smoother ground contour transitions.
- When blowing leaves or debris, observe the wind direction and work with the wind whenever possible. Select a pattern which will blow all material in the same direction.

**See tractor operators manual*

MAINTENANCE/ADJUSTMENTS

Daily:

- Check for any signs of loose bolts and nuts, tighten as needed.
- Visually inspect both the inlet and outlet areas for foreign objects and/or material.
- Visually inspect the fins of the turbine blower fan and the inside of the blower housing for buildup of dirt or dust. If build up occurs, blower efficiency can be affected and a loss of air volume and velocity may be noticed. Clean as needed.

Note: Do not spray water into the blower while the blower is running.

25 Hours:

- Lubricate the nozzle base retainers (page E-7, ref 4) with a Teflon type dry spray lubricant. This will clean as well as lubricate, assuring a smooth operation of the nozzle, DO NOT use silicone which will attract dust and dirt, hindering in the operation of the nozzle.
- Grease the wheel bearings on the caster wheel with two-three pumps of grease.

100 hours:

- Grease the two jackshaft bearings (page E-1, ref. 31)and the turbine shaft support bearing, (page E-1, ref 17) usually ½ to 1 pump is sufficient. DO NOT OVER GREASE.

Note: Internal bearings in the Turbine Blower are sealed and do not require lubrication.

DO NOT OVER GREASE!

Bearing seals may become damaged from over greasing, causing premature bearing failure.

Belt Adjustment:

⚠ WARNING

Before making any repairs or adjustments, lower attachment to the ground, set parking brake, shut the engine off, and remove the key.

- To adjust turbine drive belt, remove the inlet screen (page E-3, ref 25) and increase the spring tension on the idler arm by hooking the torsion spring leg (page E-1, ref 2) in the next notch down. Reinstall the inlet screen and tighten hardware.
- To adjust the rotating nozzle drive belt, remove the extension spring (page E-5, ref 8) from the spring holder bolt in the frame and hook the spring into the next chain link. Re-hook the spring to the spring holder bolt.
- Note: Due to difference in air pressure, the nozzle may rotate freely at lower engine RPM's with the blower engaged but become erratic or not turn at all at high engine RPM's. If this occurs lubricate nozzle base as noted in maintenance or increase nozzle drive belt tension.

ILLUSTRATED DRAWING
MAIN FRAME & BLOWER DRIVE

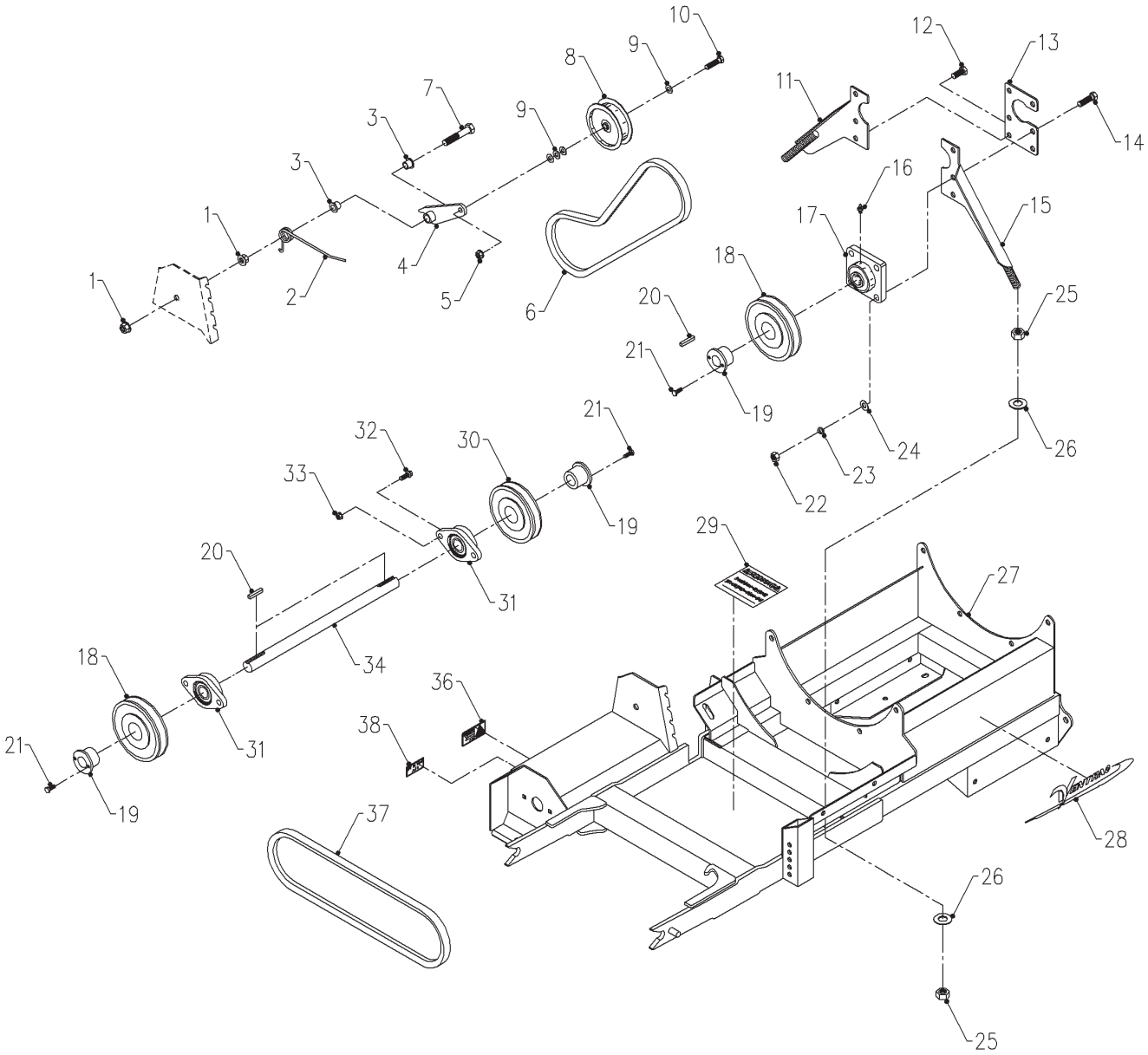

MAIN FRAME & BLOWER DRIVE

REF.	PART NO.	DESCRIPTION	QTY.
1	99.SF08	NUT, SF 1/2-13 USS	2
2	41.0066	SPRING, SINGLE TORSION LH	1
3	85.B0027	BUSHING, 1/2 ID X 5/8 OD X 5/8	2
4	64.1121	TIGHTNER, MAIN DRIVE BELT	1
5	99.SF06	NUT, SF 3/8-16 USS	1
6	81.B047	BELT, B47	1
7	90.0822	BOLT, 1/2-13 USS X 2 3/4	1
8	83.0037	PULLEY, IDLER FLAT 4" X 3/8	1
9	95.06	WASHER, FLAT 3/8 SAE	4 (A/R)
10	90.0614	BOLT, 3/8-16 USS X 1 3/4	1
11	64.1140	BRACKET, MAIN BEARING MT LEFT	1
12	90.0708	BOLT, 7/16-14 USS X 1	2
13	64.1141	PLATE, MAIN BEARING BACKING	1
14	90.0712	BOLT, 7/16-14 USS X 1 1/2	4
15	64.1119	BRACKET, MAIN BEARING MT RIGHT	1
16	29.GF0001	GREASE FTG, 1/4 SAE ST	3
17	55.FB22016-1	BEARING, FLANGE, 1"	1
18	83.BK55H	PULLEY, 5.5" H-BUSHING	2
19	83.H16S	BUSHING, 1" SPLIT 1/4" KEY	3
20	85.K0412	KEY, 1/4 X 1-1/2	3
21	90.0406	BOLT, 1/4-20 USS X 3/4	6
22	92.07	NUT, 7/16-14 USS	6
23	96.07	WASHER, LOCK 7/16	6
24	95.07	WASHER, FLAT 7/16 SAE	6
25	93.10	NUT, 5/8-18 SAE	4
26	95.10	WASHER, FLAT 5/8 SAE	4
27	62.1016	FRAME, MAIN ET200	1
28	00.0189	DECAL, VENTRAC ORBITAL	2
29	00.0062	DECAL, DANGER SHIELD MISSING	1
30	83.BK52H	PULLEY, 5.2" H-BUSH	1
31	55.FB16016-1	BEARING, FLANGE BLOCK 1"	2
32	99.SF0508	BOLT, SF 5/16-18 USS X 1	4
33	99.SF05	NUT, SF 5/16-18 USS.	4
34	80.0349	SHAFT, CR 1 X 17-1/4L KEYED EN	4
36	00.0219	DECAL, WARNING DO NOT REACH	1
37	81.B046	BELT, B46	1
38	00.0100	DECAL, MADE IN USA	1

ILLUSTRATED DRAWING
SHIELDS, STAND, & WHEEL MOUNT

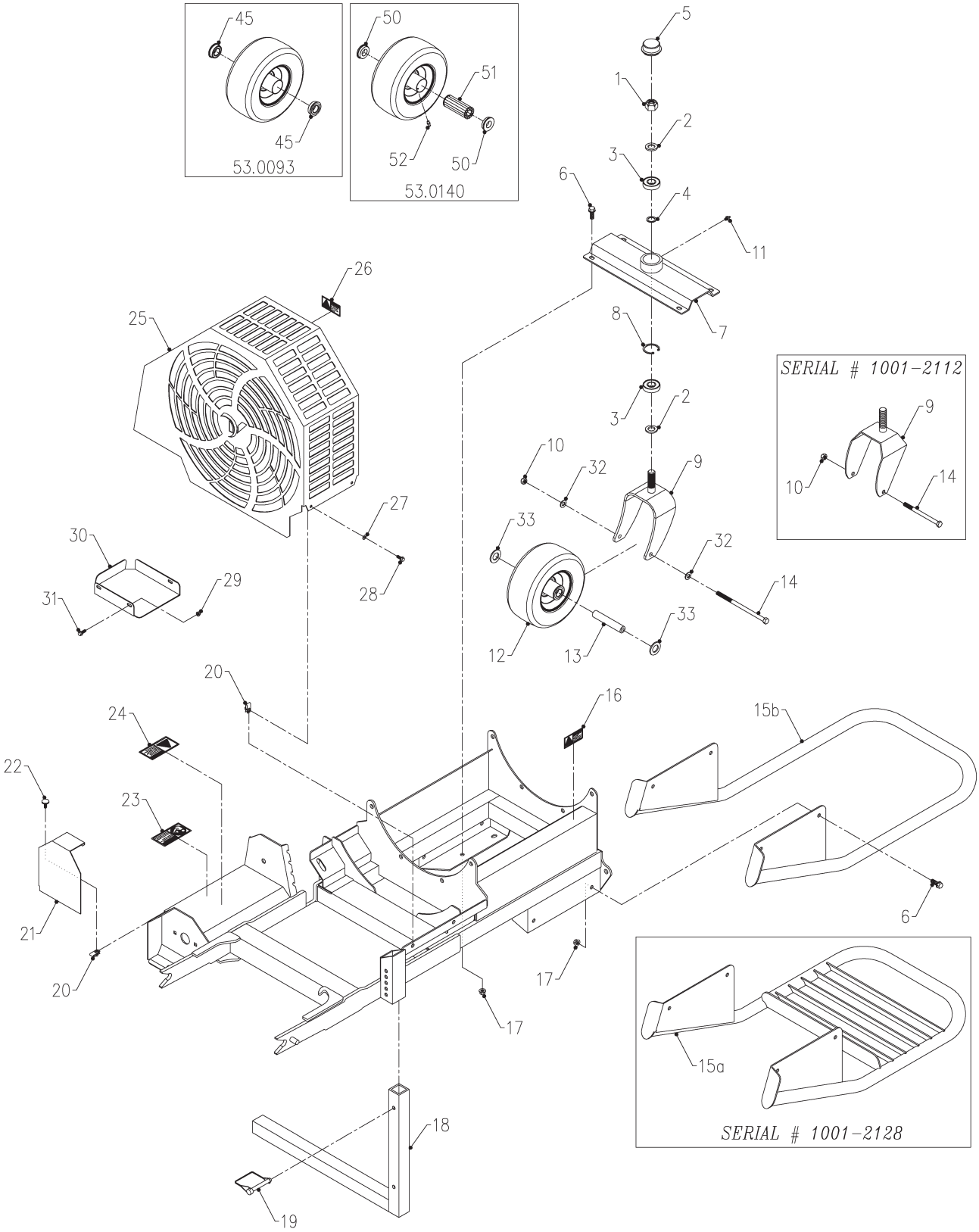

SHIELDS, STAND, & WHEEL MOUNT

REF.	PART NO.	DESCRIPTION	QTY.
1	99.A12NF	LOCKNUT, STOVER 3/4-16 SAE	1
2	99.B0057-2	WASHER, MACH3/4 X1-1/4 10GA ZP	2
3	55.0023	BEARING, BALL .75 ID X 1.78 OD	2
4	99.B0052	SHIM, STEEL 3/4 X 1 X .062	1
5	53.0080	DUST CAP, BEARING MOWER CASTER	1
6	99.SF0606	BOLT, SF 3/8-16 USS X 3/4	8
7	64.1120	FRAME, CASTER WHEEL MOUNT	1
8	04.0013	SNAP RING, INT .062 X 1.75	1
9	50.0054	YOKE, CASTER FRAME 8" TIRE (Serial # 1001-2112)	1
9	50.0185	SPINDLE, TIRE SWIVEL 9" (Serial # 2113-)	1
10	99.A06N	LOCKNUT, NYLON 3/8-16	1
11	29.GF0001	GREASE FTG, 1/4 SAE ST	1
12	53.0093	WHEEL, ASM 9 X 3.50 X4 SMOOTH (Serial # 1001-2128)	1
12	53.0140	WHEEL, ASM 9 X 3.5 X4 FLATFREE (Serial # 2129-)	1
13	50.0055	TUBE, AXLE-WHEEL LM	1
14	90.0640	BOLT, 3/8-16 USS X 5 (Serial # 1001-2112)	1
14	90.0644	BOLT, 3/8-16 USS X 5-1/2 (Serial # 2113-)	1
15a	64.1126	BUMPER, AIR DEFLECTOR (Serial # 1001-2128)	1
15b	60.1069	GUARD, DISCHARGE NOZZLE (Serial # 2129-)	1
16	00.0216	DECAL, WARNING MOVING PARTS	2
17	99.SF06	NUT, SF 3/8-16 USS	8
18	62.1391	STAND, ET200	1
19	03.0015	PIN, SAFETY SNAP 3/8 X 3"	1\
20	99.E0046	NUT, “U” 1/4-20 EXTRUDED	5
21	60.0665	SHIELD, DRIVE PULLEY	1
22	47.0167	KNOB, 1/4-20 X 1-1/4 DIA BLK	1
23	00.0217	DECAL, WARNING READ OWNERS MAN.	1
24	00.0220	DECAL, GENERAL SAFETY	1
25	64.1124	SCREEN, INLET	1\
26	00.0219	DECAL, WARNING DO NOT REACH	1
27	94.04	WASHER, FLAT 1/4 USS	4
28	99.SF0406	BOLT, SF 1/4-20 X 3/4	4
29	99.SF04	NUT, SF 1/4-20 USS	3
30	60.0893	SHIELD, LOWER LEFT AIR INLET	1
31	99.SF0404	BOLT, SF 1/4-20 X 1/2	3
32	95.06	WASHER, FLAT 3/8 SAE (Serial # 2113-)	2
33	95.12	WASHER, FLAT 3/4 SAE (Serial # 2113-)	As Required
45	55.0060	BEARING, DOUBLE-SEALED	2
50	55.0072	BEARING, RETAINER 3/4"	2
51	55.0071	BEARING, ROLLER 3.25" LONG	1
52	29.GF0001	GREASE FTG, 1/4 SAE ST	1

ILLUSTRATED DRAWING
HYDRAULIC MOTOR

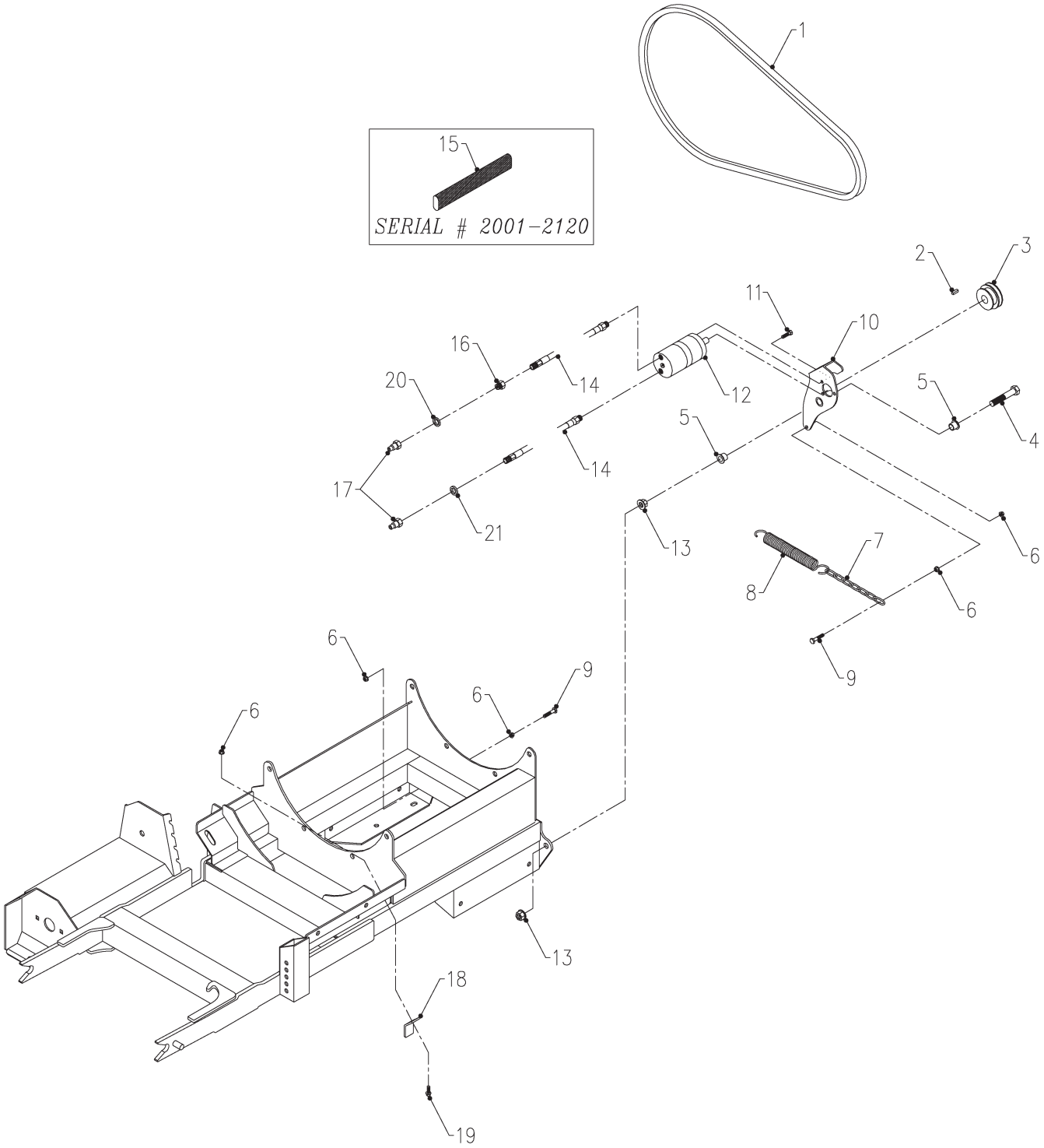

HYDRAULIC MOTOR

REF.	PART NO.	DESCRIPTION	QTY.
1	81.AX56	BELT, AX56	1
2	85.K0307	KEY, 3/16 X 5/8	1
3	83.AS1710	PULLEY, AS 1.7" 5/8" BORE	1
4	90.0822	BOLT, 1/2-13 USS X 2 3/4	1
5	85.B0027	BUSHING, 1/2 ID X 5/8 OD X 5/8	2
6	99.SF04	NUT, SF 1/4-20 USS	5
7	81.0150	CHAIN, 3/16 X 7 LINKS 7-1/8"	1
8	41.0048	SPRING, EXT. 1 OD X 6	1
9	90.0410	BOLT, 1/4-20 USS X 1 1/4	2
10	64.1122	MOUNT, ROTATING MOTOR	1
11	91.0404	BOLT, 1/4-28 SAE X 1/2	3
12	21.0113	MOTOR, HYD PEERLESS 1.93 CU.IN	1
13	99.SF08	NUT, SF 1/2-13 USS	2
14	20.0214	HOSE, ASM C 1/4 X 63" -2750	2
15	56.0060-60	SLEEVE, HOSE 1.25 X 60" (Serial # 1001-2120)	1
16	29.0092	FITTING, .025 ORIFICE 1/4 PIPE	1
17	23.0104	COUPLER, HYD. QUICK MALE 1/4	2
18	64.1125	CLAMP HOSE	1
19	99.SF0406	BOLT, SF 1/4-20 X 3/4	1
20	05.0117	WASHER, .544ID x .817 x.14 YEL	1
21	05.0116	WASHER, .544ID x .817 x.14 RED	1

ILLUSTRATED DRAWING
BLOWER MOUNT & DISCHARGE NOZZLE

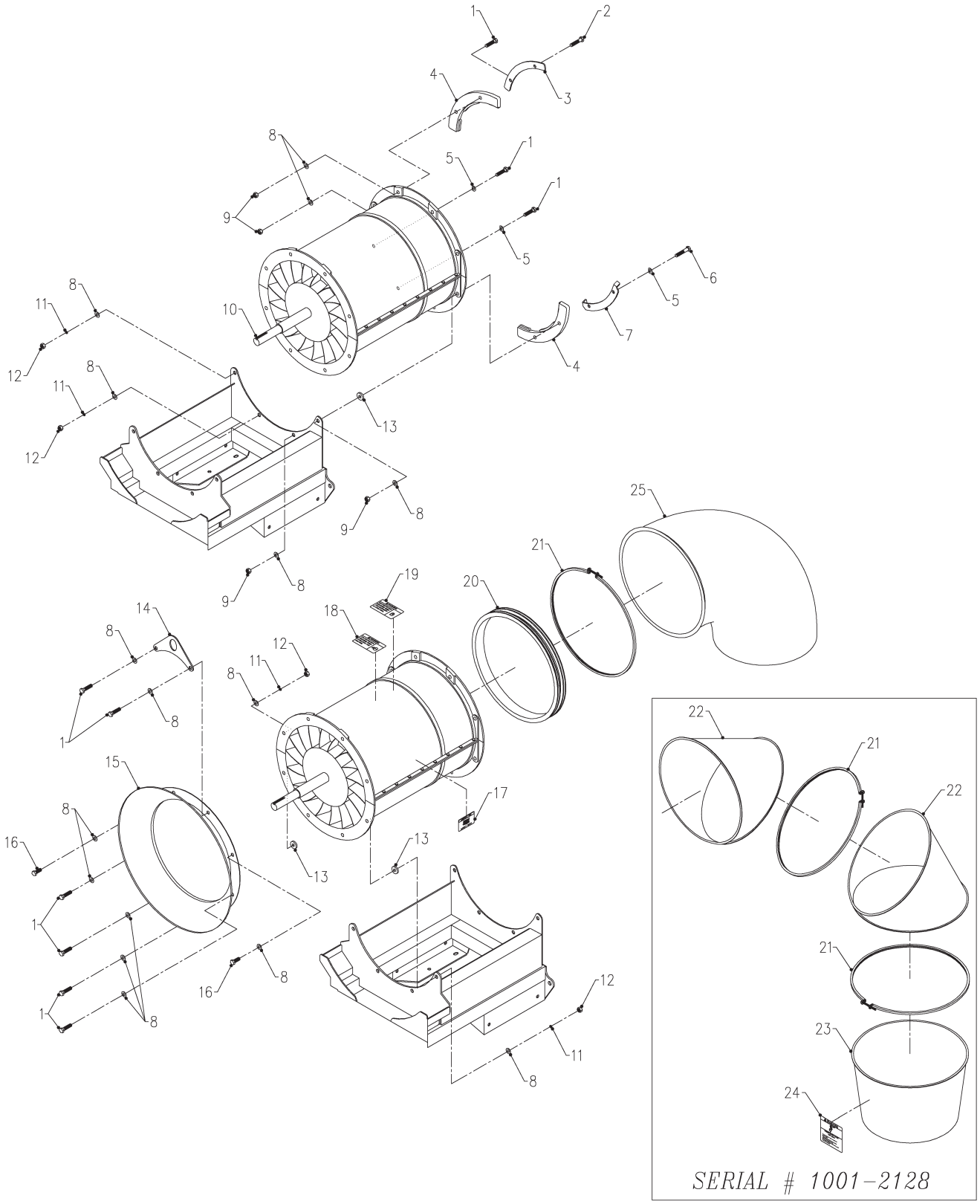

BLOWER MOUNT & DISCHARGE NOZZLE

REF.	PART NO.	DESCRIPTION	QTY.
1	90.0612	BOLT, 3/8-16 USS X 1 1/2	9
2	90.0614	BOLT, 3/8-16 USS X 1 3/4	1
3	44.0212	CLAMP, BLOWER DISCHARGE UPPER	1
4	07.22114	SLIDE	2
5	07.22113	WASHER, 3/8 NOTCHED	4
6	90.0616	BOLT, 3/8-16 USS X 2	2
7	44.0213	CLAMP, BLOWER DISCHARGE LOWER	1
8	95.06	WASHER, FLAT 3/8 SAE	22
9	99.A06	LOCKNUT, STOVER 3/8-16 USS	4
10	07.22102	BLOWER ASSEMBLY (TURBINE)	1
11	96.06	WASHER, LOCK 3/8	10
12	92.06	NUT, 3/8-16 USS	10
13	07.22116	SPACER, 3/8 ID X 1 OD X 3/16	4
14	64.1123	PLATE, ANCHOR LIFT RING	1
15	07.22115	BELLMOUTH	1
16	90.0608	BOLT, 3/8-16 USS X 1	2
17	07.22103	DECAL, AMERICA & SAFETY FIRST	2
18	07.22107	DECAL, WARNING-EYE PROTECTION	1
19	07.22106	DECAL, WARNING-EAR PROTECTION	1
20	07.22112	ELBOW BASE, V GROOVE	1
21	07.22109	CLAMP BAND	1
22	07.22111	ELBOW SEGMENT, 45 DEGREE (Serial # 1001-2128)	2
23	07.22110	12" ROUND NOZZLE (Serial # 1001-2128)	1
24	07.22104	DECAL, THROWN OBJECT (Serial # 1001-2128)	3
25	07.22117	NOZZLE, TURBINE PLASTIC (Serial # 2129-)	1

LIMITED WARRANTY – VENTRAC TURF EQUIPMENT

Venture Products, Inc. (shall be referred to as *V.P.I.*) warrants on the terms and conditions herein, that it will repair, replace, or adjust any part manufactured by *Venture Products* Inc. and found by *Venture Products Inc* to be defective in material and / or workmanship.

Effective September 1st 2005, *Ventrac* warranty on Tractors & Attachments (excluding the HG100/HG150 generator) for **Residential use only** is limited to **Three (3) years** from original purchase date. Ventrac Tractors & Attachments used **Commercially or for any income producing purpose** is limited to **Two (2) years** from original purchase date. *Ventrac* ET200 turbine blower (turbine only) is limited to **Two (2) years** from original purchase date. *Ventrac* HG100/HG150 generator is limited to **One (1) year** from original purchase date. *Ventrac* Tractors & Attachments used for **Rental** is limited to **180 days** from original purchase date. (**NOTE:** All accessories such as: 3-point hitch, foot pedal, dual wheel kit, etc. will be covered under the above warranty periods as they would apply provided they are installed by an Authorized *Ventrac* Dealer.) This warranty may be transferred and will carry the remainder of the warranty starting from the Original Purchase/Registration date with the dealership and/or *V.P.I.* In the event that product/s originally registered as **(3) year Residential use** are to be transferred to a commercial user the warranty would change to the remainder of **(2) year Commercial use** starting from the Original Purchase/Registration date with the dealership and/or *V.P.I.*

If this warranty covers a consumer product as defined by the Magnusson-Moss warranty act, no warranties, express or implied, (including, but not limited to, the warranty of merchantability or fitness for a particular purpose) shall extend beyond the applicable time period stated in bold face type above.

If this warranty covers a product used commercially or for any income producing purpose, the foregoing warranties are in lieu of all other warranties and no representations, guarantees or warranties, express or implied, (including, but not limited to, a warranty of merchantability or fitness for a particular purpose), are made by *V.P.I.* in connection with the manufacture or sale of its products.

The engine warranty is covered by its respective engine manufacturer. Please refer to the engine manufacturer's warranty statement that is included in the owner's manual.

The *Ventrac* turf equipment, including any defective parts, must be returned to an Authorized *Ventrac* Dealer within the warranty period. The warranty shall extend to the cost to repair or replace (as determined by *V.P.I.*) the defective part. **The expense of pickup and delivery of equipment, service call drive time or any transportation expense incurred for warranty repair is the sole responsibility of the owner and is not covered under warranty by *Ventrac and/or V.P.I.*** *V.P.I.'s* responsibility in respect to claims is limited to making the required repairs or replacements, and no claim of breach of warranty shall be cause for cancellation or rescission of the contract of sale of any *Ventrac* equipment. Proof of purchase may be required by the dealer to substantiate any warranty claim. Only warranty work performed and submitted by an Authorized *Ventrac* Dealer may be eligible for warranty credit.

This warranty extends only to *Ventrac* turf equipment operated under normal conditions and properly serviced and maintained. The warranty expressly does **NOT** cover: (a) any defects, damage or deterioration due to normal use, wear and tear, or exposure; (b) normal maintenance services, such as cleaning, lubrication, oil change; (c) replacement of service items, such as oil, lubricants, spark plugs, belts, rubber hoses or other items subject to normal service replacement; (d) damage or defects arising out of, or relating to abuse, misuse, neglect, alteration, negligence or accident; (e) repair or replacement arising from

operation of, or use of the turf equipment which is not in accordance with operating instructions as specified in the operator's manual or other operational instructions provided by *V.P.I.*; (f) repair or replacement arising as a result of any operation from Ventrac turf equipment that has been altered or modified so as to, in the determination of *V.P.I.*, adversely affect the operation, performance or durability of the equipment or that has altered, modified or affected the turf equipment so as to change the intended use of the product; (g) repair or replacement necessitated by the use of parts, accessories or supplies, including gasoline, oil or lubricants, incompatible with the turf equipment or other than as recommended in the operator's manual or other operational instructions provided by *V.P.I.;* (h) repairs or replacements resulting from parts or accessories which have adversely affected the operation, performance or durability of the turf equipment; or (i) damage or defects due to or arising out of repair of *Ventrac* turf equipment by person or persons other than an authorized *Ventrac* service dealer or the installation of parts other than genuine *Ventrac* parts or *Ventrac* recommended parts.

The sole liability of *V.P.I.* with respect to this warranty shall be repair and replacement as set forth herein. *V.P.I.* shall have no liability for any other cost, loss, or damage. In particular *V.P.I* shall have no liability or responsibility for: (i) expenses relating to gasoline, oil, lubricants; (ii) loss, cost or expense relating to transportation or delivery of turf equipment from the location of owner or location where used by owner to or from any Authorized *Ventrac* Dealer; (iii) travel time, overtime, after hours time or other extraordinary repair charges or charge relating to repairs or replacements outside of normal business hours at the place of business of an Authorized *Ventrac* Dealer; (iv) rental of like or similar replacement equipment during the period of any warranty repair or replacement work; (v) any telephone or telegram charges; (vi) loss or damage to person or property other than that covered by the terms of this warranty; (vii) any claims for lost revenue, lost profit or additional cost or expense incurred as a result of a claim of breach of warranty; or (viii) attorney's fees.

The remedies of buyer set forth herein are exclusive and are in lieu of all other remedies. The liability of *V.P.I.*, whether in contract, tort, under any warranty, or otherwise, shall not extend beyond its obligation as set forth herein. *V.P.I.* shall not be liable for cost of removal or installation nor shall *V.P.I.* be responsible for any direct, indirect, special or consequential damages of any nature. In no event shall *V.P.I.* be liable for any sum in excess of the price received for the goods for which liability is claimed.

There are no representations or warranties which have been authorized to the buyer of the turf equipment other than set forth in this warranty. Any and all statements or representations made by any seller of this equipment, including those set forth in any sales literature or made orally by any sales representative, are superceded by the terms of this warranty. Any affirmation of fact or promise made by *V.P.I.* or any of its representatives to the buyer which relates to the goods that are the subject to this warranty shall not be regarded as part of the basis of the bargain and shall not be deemed to create any express warranty that such goods shall conform to the affirmation or promise.

No employee, distributor, or representative is authorized to change the foregoing warranties in any way or grant any other warranty on behalf of *V.P.I.*

Some states do not allow limitations on how long an implied warranty lasts or allow the exclusion on limitation of incidental or consequential damages, so the above limitation or exclusion may not apply to you.

This warranty gives you specific legal rights, and you may also have other rights which vary from state to state.

This warranty applies to all *Ventrac* turf equipment sold in the United States and Canada.