Operator's Manual & Parts Drawings

Power Broom

Model HB580

VENTRAC by Venture Products Inc.

VENTRAC® MOUNT SYSTEM

Revised 12/04/13
09.10007 Rev. 02

328 East Water St.
PO Box 148
Orrville Oh 44667
www.ventrac.com

To the Owner
Contact Information and Product Identification

If you need to contact an authorized Ventrac dealer for information on servicing your product, always provide the product model and serial numbers.

Please fill in the following information for future reference. See the picture(s) below to find the location of the identification numbers. Record them in the spaces provided.

Date of Purchase: _____

Dealer: _____

Dealer Address: _____

_____

Dealer Phone Number: _____

Dealer Fax Number: _____

Model # (A): _____

Serial # (B): _____

Affix Part/Serial Number label here.

Venture Products Inc. reserves the right to make changes in design or specifications without obligation to make like changes on previously manufactured products.

TABLE OF CONTENTS

INTRODUCTION PAGE 5

Product Description....5
Why Do I Need an Operator's Manual?....5
Using Your Manual....6
Manual Glossary....6

SAFETY PAGE 7

Safety Decals....7
General Safety Procedures....8
Training Required....8
Personal Protective Equipment Requirements....8
Operation Safety....8
Preventing Accidents....9
Keep Riders Off....9
Operating On Slopes....10
Roadway Safety....10
Truck Or Trailer Transport....10
Maintenance....11
Fuel Safety....11
Hydraulic Safety....12
HB580 Safety Procedures....13

GENERAL OPERATION PAGE 14

Daily Inspection....14
Attaching....14
Detaching....14
Operating Procedure....14
Slowing or Reversing Broom Rotation (12 Volt Electric Actuator)....15
Gauge Wheel Adjustment....15
Tire Spindle Position....15

SERVICE PAGE 16

Cleaning and General Maintenance....16
Belt Inspection....16
Drive Belt Replacement....16
Tire Pressure....16
Lubrication Locations....16
Checking Hydraulic Oil Level....16
Changing Hydraulic Oil & Filter....16
Broom Rotor Replacement....17
Storage....17
Maintenance Schedule....18
Maintenance Checklist....18

TABLE OF CONTENTS

SPECIFICATIONS **PAGE 19**
Dimensions 19
Features 19

PARTS **PAGE 20**
Main Frame & Rotor 20
Hitch Frame 22
Hydraulic Drive 24
70.8025 Optional 12V Electric Actuator 26

WARRANTY **PAGE 28**

INTRODUCTION

Venture Products Inc. is pleased to provide you with your new Ventrac HB580 power broom! We hope that Ventrac equipment will provide you with a ONE Tractor Solution.

Listed below are just some of the items that can provide you *versatility* as you use your HB580. Please visit our web site, or contact your authorized Ventrac dealer for a complete list of items available for your new HB580 power broom.

Accessories	Item Description	Part Number
	12V Actuator Kit (for reverse rotation & variable speed)	70.8025

Product Description

The HB580 power broom is designed for sweeping and removal of material such as snow, leaves, dirt, light gravel, and even thatch.

The broom can be hydraulically angled left or right and lifted up or down with the power unit's SDLA control*. A corner-less frame design permits sweeping against curbs and allows for the cleaning of corners.

When detached, the broom maintains an upright position for easy reattachment.

The gauge wheel height can be easily adjusted to accommodate brush wear, and the nylon bristle broom cores can be changed in just a few minutes.

An optional electric actuator** allows the operator to adjust the speed and direction of the broom rotation, maximizing effectiveness and allowing the operator to reverse broom rotation, all from the seat of the power unit.

Why Do I Need an Operator's Manual?

This manual has been created to help you gain the important knowledge of what is needed to safely operate, maintain, and service your machine. It is divided into sections for convenient reference of the appropriate section.

You must read and understand the operator's manual for each piece of Ventrac equipment you own. Reading the operator's manual will help you become familiar with each specific piece of equipment. Understanding the operator's manual will help you, as well as others, avoid personal injury and/or damage to the equipment. Keep this manual with the machine at all times. The manual should remain with the machine even if it is sold. If this manual becomes damaged or unreadable, it should be replaced immediately. Contact your local Ventrac dealer for a replacement.

When using a Ventrac attachment, be sure to read and follow the safety and operating instructions of both the power unit and the attachment being used to ensure the safest operation possible.

The information in this manual provides the operator with the safest procedures to operate the machine while getting the maximum use out of the unit. Failure to follow the safety precautions listed in this manual may result in personal injury and/or damage to the equipment.

*Refer to power unit operator's manual for operation of power unit controls.

**Power unit must be equipped with an optional 12V front kit. Refer to following list for the correct kit for your power unit.

HT4000 = 70.4046

KT4100/KT4200 = 70.4039

KN4500 = 70.4104

Using Your Manual

Throughout this manual, you will encounter special messages and symbols that identify potential safety concerns to help you as well as others avoid personal injury or damage to the equipment.

SYMBOL DEFINITIONS

ATTENTION

This symbol identifies potential health and safety hazards. It marks safety precautions. Your safety and the safety of others is involved.

There are three signal words that describe the level of safety concern: Danger, Warning, and Caution. Safety should always be the #1 priority when working on or operating equipment. Accidents are more likely to occur when proper operating procedures are not followed or inexperienced operators are involved.

Note: Right-Hand and Left-Hand orientations may be referred to at different places throughout this manual. Right-Hand and Left-Hand is determined as if sitting on the power unit seat facing forward.

SIGNAL WORD DEFINITIONS

DANGER

Indicates an imminently hazardous situation which, if not avoided, will result in death or serious injury. This signal word is limited to the most extreme cases.

WARNING

Indicates a potentially hazardous situation which, if not avoided, could result in death or serious injury.

CAUTION

Indicates a potentially hazardous situation which, if not avoided, may result in minor or moderate injury and/or property damage. It may also be used to alert against unsafe practices.

Manual Glossary

Power Unit A Ventrac tractor or other Ventrac engine powered device that may be operated by itself or with an attachment or accessory.

Attachment A piece of Ventrac equipment that requires a Power Unit for operation.

Accessory A device that attaches to a Power Unit or Attachment to extend its capabilities.

Machine Describes any “Attachment” or “Accessory” that is used in conjunction with a power unit.

Safety Decals

The following safety decals must be maintained on your HB580 power broom.

Keep all safety decals legible. Remove all grease, dirt, and debris from safety decals and instructional labels. If any decals are faded, illegible, or missing, contact your dealer promptly for replacements.

When new components are installed, be sure that current safety decals are affixed to the replacement components.

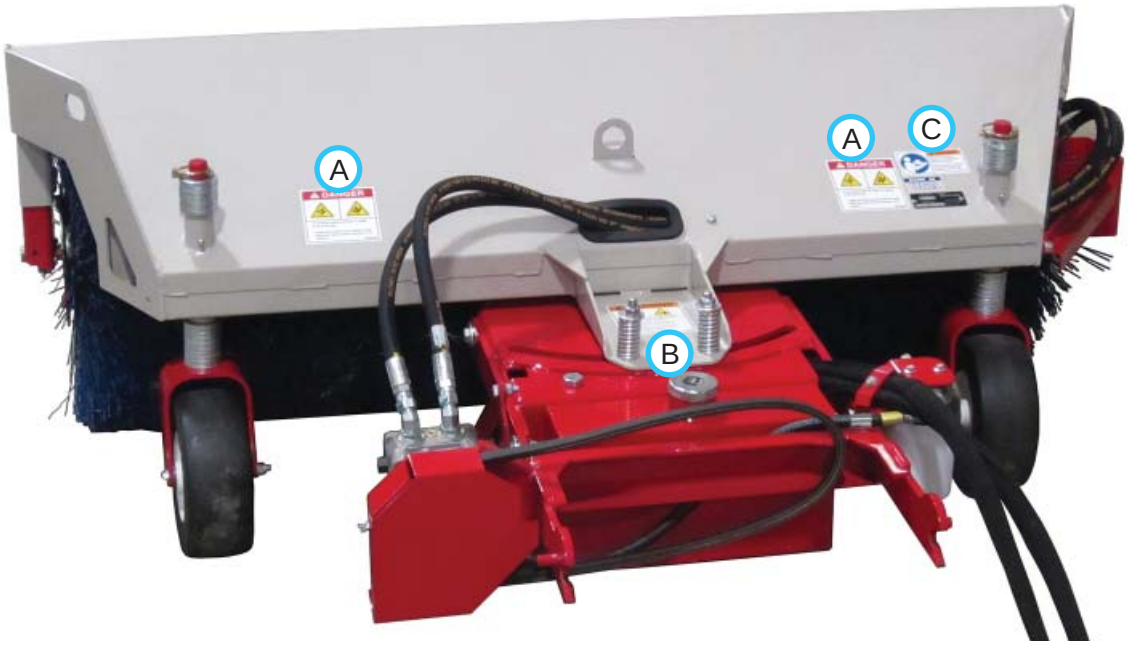

A

B

C

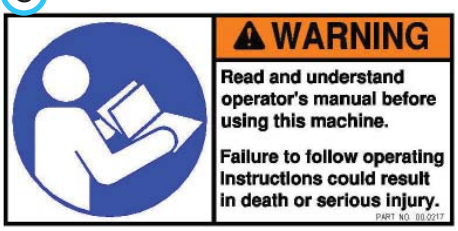

Decal	Description	Part Number	Quantity
A	Danger, Pinching Hazard	00.0102	2
B	Warning, High Pressure Fluid Hazard	00.0103	1
C	Warning, Read Owner’s Manual	00.0217	1

General Safety Procedures for Ventrac Power Units, Attachments, & Accessories

Training Required

- The owner of this machine is solely responsible for properly training the operators.
- The owner/operator is solely responsible for the operation of this machine and prevention of accidents or injuries occurring to him/herself, other people, or property.
- Do not allow operation or service by children or untrained personnel. Local regulations may restrict the age of the operator.
- Before operating this machine, read the operator's manual and understand its contents.
- If the operator of the machine cannot understand this manual, then it is the responsibility of this machine's owner to fully explain the material within this manual to the operator.
- Learn and understand the use of all controls.
- Know how to stop the power unit and all attachments quickly in the event of an emergency.

Personal Protective Equipment Requirements

It is the responsibility of the owner to be sure that the operators use the proper personal protective equipment while operating the machine. Required personal protective equipment includes, but is not limited to, the following list.

- Wear a certified ear protection device to prevent loss of hearing.
- Prevent eye injury by wearing safety glasses while operating the machine.
- Closed toe shoes must be worn at all times.
- Long pants must be worn at all times.
- When operating in dusty conditions, it is recommended that a dust mask be worn.

Operation Safety

- Inspect machine before operation. Repair or replace any damaged, worn, or missing parts. Be sure guards and shields are in proper working condition and are secured in place. Make all necessary adjustments before operating machine.
- Some pictures in this manual may show shields or covers opened or removed in order to clearly illustrate any instructions. Under no circumstance should the machine be operated without these devices in place.
- Alterations or modifications to this machine can reduce safety and could cause damage to the machine. Do not alter safety devices or operate with shields or covers removed.
- Before each use, verify that all controls function properly and inspect all safety devices. Do not operate if controls or safety devices are not in proper working condition.
- Check parking brake function before operating. Repair or adjust parking brake if necessary.
- Observe and follow all safety decals.
- All controls are to be operated from the operator's seat only.
- Always wear a seat belt if the machine has a roll cage/bar installed and in upright position.
- Ensure the attachment or accessory is locked or fastened securely to the power unit before operating.
- Ensure that all bystanders are clear of the power unit and attachment before operating. Stop machine if someone enters your work area.
- Always be alert to what is happening around you, but do not lose focus on the task you are performing. Always look in the direction the machine is moving.
- Look behind and down before backing up to be sure of a clear path.
- If you hit an object, stop and inspect the machine. Make all necessary repairs before operating machine again.
- Stop operation immediately at any sign of equipment failure. An unusual noise can be a warning of equipment failure or a sign that maintenance is required. Make all necessary repairs before operating machine again.

General Safety Procedures for Ventrac Power Units, Attachments, & Accessories

Operation Safety (continued)

- If equipped with a high/low range feature, never shift between high and low range while on a slope. Always move the machine to level ground and engage the parking brake before shifting range.
- Do not leave machine unattended while it is running.
- Always park the machine on level ground.
- Always shut off engine when connecting attachment drive belt to the power unit.
- Never leave the operator's seat without lowering the attachment to the ground, setting the parking brake, shutting off the engine, and removing the ignition key. Make sure all moving parts have come to a complete stop before dismounting.
- Never leave equipment unattended without lowering the attachment to the ground, setting the parking brake, shutting off the engine, and removing the ignition key.
- Only operate in well-lit conditions.
- Do not operate when there is a risk of lightning.
- Never direct the discharge of any attachment in the direction of people, buildings, animals, vehicles, or other objects of value.
- Never discharge material against a wall or obstruction. Material may ricochet back towards the operator.
- Use extra caution when approaching blind corners, shrubs, trees, or other objects that may obscure vision.
- Do not run the engine in a building without adequate ventilation.
- Do not touch the engine or the muffler while the engine is running or immediately after stopping the engine. These areas may be hot enough to cause a burn.
- Do not change the engine governor settings or over-speed the engine. Operating engine at excessive speed may increase the hazard of personal injury.
- To reduce the hazard of fire, keep the battery compartment, engine, and muffler areas free of grass, leaves, and excessive grease.

Preventing Accidents

- Clear working area of objects that might be hit or thrown from machine.
- Keep people and pets out of mowing area.
- Know the work area well before operation. Do not operate where traction or stability is questionable.
- Reduce speed when you are operating over rough ground.
- Equipment can cause serious injury and/or death when improperly used. Before operating, know and understand the operation and safety of the power unit and the attachment being used.

- Do not operate machine if you are not in good physical and mental health, if you will be distracted by personal devices, or are under the influence of any substance which might impair decision, dexterity, or judgment.
- Children are attracted to machine activity. Be aware of children and do not allow them in the working area. Turn off the machine if a child enters the work area.

Keep Riders Off

- Only allow the operator on the power unit. Keep riders off.
- Never allow riders on any attachment or accessory.

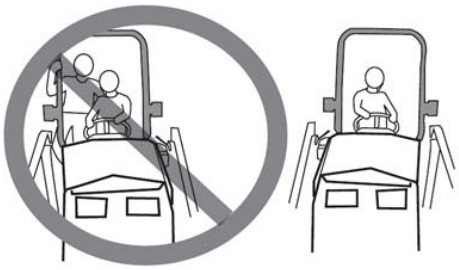

General Safety Procedures for Ventrac Power Units, Attachments, & Accessories

Operating On Slopes

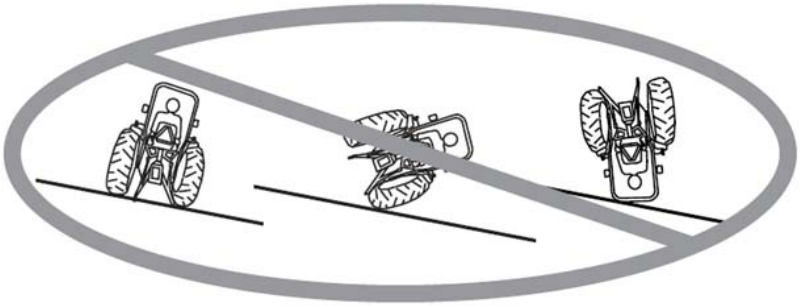

- Slopes can cause loss-of-control and tip-over accidents, which can result in severe injury or death. Be familiar with the emergency parking brake, along with the power unit controls and their functions.
- If power unit is equipped with a fold down roll bar, it must be locked in the upright position when operating on any slope.
- Use low range (if equipped) when operating on slopes greater than 15 degrees.
- Do not stop or start suddenly when operating on slopes.
- Never shift between high and low range while on a slope. Always move the power unit to level ground and place the selector lever in park before shifting range or placing the power unit in neutral.
- Variables such as wet surface and loose ground will reduce the degree of safety. Do not drive where machine could lose traction or tip over.
- Keep alert for hidden hazards in the terrain.
- Stay away from drop-offs, ditches, and embankments.
- Sharp turns should be avoided when operating on slopes.
- Pulling loads on hills decreases safety. It is the responsibility of the owner/operator to determine loads that can safely be controlled on slopes.
- Transport machine with attachment lowered or close to the ground to improve stability.
- While operating on slopes, drive in an up and down direction when possible. If turning is necessary while driving across slopes, reduce speed and turn slowly in the downhill direction.
- Assure a sufficient supply of fuel for continuous operation. A minimum of one-half tank of fuel is recommended.

Roadway Safety

- Operate with safety lights when operating on or near roadways.
- Obey all state and local laws concerning operation on roadways.
- Slow down and be careful of traffic when operating near or crossing roadways. Stop before crossing roads or sidewalks. Use care when approaching areas or objects that may obscure vision.
- If there is doubt of safety conditions, discontinue machine operation until a time when operation can be performed safely.
- When operating near or on roadways, have a Slow Moving Vehicle Emblem clearly displayed.

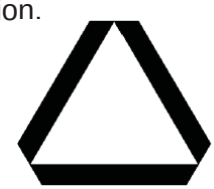

Truck Or Trailer Transport

- Use care when loading or unloading machine into a truck or trailer.
- The parking brake is not sufficient to lock the machine during transport. Always secure the power unit and/or attachment to the transporting vehicle.
- Shut off fuel supply to power unit during transport on truck or trailer.
- If equipped, turn the battery disconnect switch to the Off position to shut off electrical power.

General Safety Procedures for Ventrac Power Units, Attachments, & Accessories

Maintenance

- Keep all safety decals legible. Remove all grease dirt, and debris from safety decals and instructional labels.
- If any decals are faded, illegible, or missing, contact your dealer promptly for replacements.
- When new components are installed, be sure that current safety decals are affixed to the replacement components.
- If any component requires replacement, use only original Ventrac replacement parts.
- Always disconnect the negative battery cable from the battery when working with electrical components.
- Keep all bolts, nuts, screws, and other fasteners properly tightened.
- Always lower the attachment to the ground, engage parking brake, shut off engine, and remove the ignition key. Make sure all moving parts have come to a complete stop before cleaning, inspection, adjusting or repairing.
- If the power unit, attachment, or accessory requires repairs or adjustments not instructed in the operator's manual, the power unit, attachment, or accessory must be taken to an authorized Ventrac dealer for service.
- Never perform maintenance on the power unit and/or attachment if someone is sitting in the operator's seat.
- Always use protective glasses when handling the battery.
- Check all fuel lines for tightness and wear on a regular basis. Tighten or repair them as needed.
- To reduce the hazard of fire, keep the battery compartment, engine, and muffler areas free of grass, leaves, and excessive grease.
- Do not touch the engine, the muffler, or other exhaust components while the engine is running or immediately after stopping the engine. These areas may be hot enough to cause a burn.
- Do not change the engine governor settings or over-speed the engine. Operating engine at excessive speed may increase the hazard of personal injury.
- Springs may contain stored energy. Use caution when disengaging or removing springs and/or spring loaded components.
- An obstruction or blockage in a drive system or moving/rotating parts may cause a buildup of stored energy. When the obstruction or blockage is removed, the drive system or moving/rotating parts may move suddenly. Do not attempt to remove an obstruction or blockage with your hands. Keep hands, feet, and clothing away from all power-driven parts.
- Dispose of all fluids in accordance with local laws.

Fuel Safety

- Do not refuel machine while smoking or at a location near flames or sparks.
- Always refuel the machine outdoors.
- Do not store machine or fuel container indoors where fumes or fuel can reach an open flame, spark, or pilot light.
- Only store fuel in an approved container. Keep out of reach of children.
- Never remove fuel cap or add fuel with the engine running. Allow engine to cool before refueling.
- Replace all fuel tank and container caps securely.
- Do not overfill fuel tank.
- If fuel is spilled, do not attempt to start the engine. Move the power unit away from the fuel spill and avoid creating any source of ignition until fuel vapors have dissipated.
- If the fuel tank must be drained, it should be drained outdoors into an approved container.
- Dispose of all fluids in accordance with local laws.
- Check all fuel lines for tightness and wear on a regular basis. Tighten or repair them as needed.
- The fuel system is equipped with a shut-off valve. Shut off the fuel when transporting the machine to and from the job, when parking the machine indoors, or when servicing the fuel system.

General Safety Procedures for Ventrac Power Units, Attachments, & Accessories

Hydraulic Safety

- Make sure all hydraulic connections are tight and all hydraulic hoses and tubes are in good condition. Repair any leaks and replace any damaged or deteriorated hoses or tubes before starting the machine.
- Hydraulic leaks can occur under high pressure. Hydraulic leaks require special care and attention.
- Use a piece of cardboard and a magnifying glass to locate suspected hydraulic leaks.

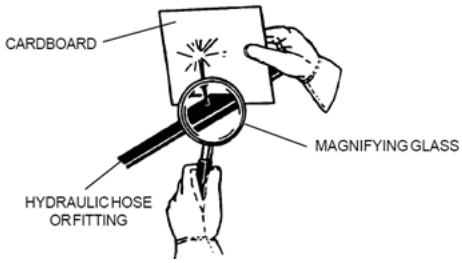

- Keep body and hands away from pinhole leaks or nozzles that eject high pressure hydraulic fluid. Hydraulic fluid escaping under high pressure can penetrate the skin causing serious injury. If hydraulic fluid is injected into skin, seek immediate medical attention.
- Hydraulic system may contain stored energy. Before performing maintenance or repairs on the hydraulic system, remove attachments, engage parking brake, disengage weight transfer system (if equipped), shut off engine, and remove ignition key. To relieve pressure on the auxiliary hydraulic system, shut off the power unit engine and move the secondary S.D.L.A. lever left and right before disconnecting the auxiliary hydraulic quick couplers.
- Dispose of all fluids in accordance with local laws.

HB580 Safety Procedures

- The HB580 power broom is designed to sweep. Do not use the power broom to push or pull objects.
- The power broom can create a dust cloud that may obstruct your vision. Slowing the rotational speed of the broom by either reducing the power unit engine RPMs or using an optional electric actuator, will usually reduce the amount of dust created.
- Use caution when sweeping near anything that could be damaged by thrown objects. Whenever possible, sweep materials away from buildings and other objects of value. When sweeping near buildings or objects of value, slowing the rotational speed of the broom by either reducing the power unit engine RPMs or using an optional electric actuator, will reduce the distance and velocity at which objects can be thrown from the power broom.

Daily Inspection

⚠ WARNING

Always set the parking brake, shut off power unit engine, remove the ignition key, and ensure all moving parts have come to a complete stop before inspecting components, or attempting any repair or adjustment.

1. Park machine on a level surface, with the engine shut off and all fluids cold.
2. Perform a visual inspection of both the power unit and the power broom. Look for loose or missing hardware, damaged components, or signs of wear.
3. Inspect hydraulic hoses, hydraulic fittings, and fuel lines to ensure tight, leak free connections.
4. Inspect the drive belt. The belt should be in good condition. Service as required.
5. Check the gauge wheel height setting and adjust if necessary
6. Refer to the power unit operator's manual. Check the power unit's engine oil, hydraulic oil, cooling system, tire pressure, and fuel level. Add fluid or service as required.
7. Test the power unit's operator safety interlock system*.

Attaching

1. Drive the power unit slowly forward into the hitch arms of the power broom. Align the lift arms of the power unit with the power broom hitch arms by raising or lowering the front hitch and complete the engagement.
2. Once completely engaged, close the front hitch locking lever.*
3. Engage the parking brake* and shut off the engine.
4. Place the attachment belt onto the PTO drive pulley on the power unit. Ensure the belt is properly seated in each pulley.
5. Engage the PTO tension spring.
6. Wipe hose ends clean, and connect to the power unit's hydraulic quick couplers. If equipped, connect the hoses and quick couplers so the red indicators are paired together and the yellow indicators are paired together.
7. If power broom is equipped with an electric actuator, connect to the electric plug on the power unit.

Detaching

1. Park the power unit on a level surface and set the parking brake.*
2. Lower the power broom to the ground.
3. Shut off power unit engine.
4. Disengage the PTO tension spring.
5. Remove the attachment belt from the PTO drive pulley of the power unit.
6. Disconnect the hydraulic quick couplers from the power unit and store with the hose ends on the tank frame. Do not allow the hose ends to lay in the dirt.
7. Disconnect the electric plug (if equipped).
8. Disengage the front hitch locking lever.*
9. Restart the power unit and slowly back away from the power broom. A side to side movement of the steering wheel may aid disengagement.

Operating Procedure

Before operation, perform daily inspection and engage the power unit's weight transfer.

Move the machine into position and lower the power broom to the ground. Place the power unit's primary SDLA lever in the float position by pushing it to the right until the detent engages. The lever will stay in this position until intentionally removed. Use the power unit's secondary SDLA lever to adjust the broom to the desired angle.

⚠ WARNING

When the broom is angled to the left or right, pinch points are created. Make sure there are no people or objects present between the broom frame and the power unit.

With the power unit's engine running between 2,000 and 2,500 RPM, engage the PTO switch. Adjust the power unit throttle until the engine is running at approximately 3,200 RPM. Drive forward at a speed that is safe and gives the desired results.

The power broom can be used to sweep debris, including leaves and snow, from driveways, sidewalks, parking lots, etc. The power broom can effectively sweep several inches of snow. The type of snow and prevailing winds will affect the results.

When sweeping, cooperate with the wind direction as much as possible. Slowing the broom rotation RPM can reduce blowing dust. Reduce rotation

* Refer to power unit operator's manual for operation of power unit controls.

speed by slowing the power unit engine RPM. If the broom is equipped with an electric actuator, slow the broom rotation using the 12 volt switch* on the power unit.

Excessive amounts of debris on the broom frame will obstruct vision and add unwanted weight. Clean as necessary.

Slowing or Reversing Broom Rotation (12 Volt Electric Actuator)

If the power broom is equipped with an electric actuator, the broom rotation can be slowed or reversed from the power unit seat. The normal setting for sweeping is full speed forward. To slow broom rotation, activate the power unit's 12v switch* until the desired speed is reached. To reverse broom rotation, activate the power unit's 12v switch* until the broom rotor stops and reverses to the desired speed. Return the broom to full speed forward rotation for most sweeping.

The reversing feature is designed for pulling debris or snow from corners, tight spots, doors, walls, steps, etc.

Gauge Wheel Adjustment

The power broom is equipped with two adjustable gauge wheels. As the nylon bristles of the broom rotor wear down, the gauge wheels will need to be adjusted to maintain proper ground contact. The vertical adjustment of the gauge wheels is done by the placement of a series of washers above and below the mounting tube. The number of upper and lower washers must be the same on both the left and right gauge wheels.

The suggested setting for the gauge wheels is the point at which the broom sweeps 2 to 4 inches (5 to 10 cm) of surface area when the machine is parked.

Some situations may require a more or less aggressive sweeping action. Gauge wheel adjustment, broom speed, and travel speeds are factors to apply.

Attention

Excessive heat and/or damage may occur to the drive train if the power broom is abused by stoppage or severe loads. Proper sweeping action requires the broom rotor to rotate freely.

Tire Spindle Position

The tire swivel spindle (serial # 1405-) is equipped with two hole options for mounting the tire. The standard mounting hole (A) is the furthest from the pivot shaft. The second hole (B) should only be used when driving the machine in reverse the majority of the time.

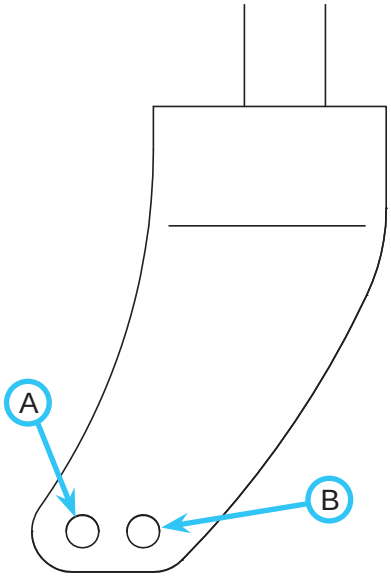

⚠ WARNING

Always set the parking brake, shut off power unit engine, remove the ignition key, and ensure all moving parts have come to a complete stop before inspecting components or attempting any repair or adjustment.

⚠ Attention

If any component requires replacement, use only original Ventrac replacement parts.

Cleaning and General Maintenance

For best results, and to maintain the finish of the HB580, clean or wash the power broom to remove dirt, gravel, and debris.

Belt Inspection

Inspecting the drive belt of the power broom can prevent sudden belt failure by finding problems before they cause a belt to break.

Typical wear on a drive belt may result in the conditions shown in the diagram. If any of these conditions occur, the drive belt will require replacement.

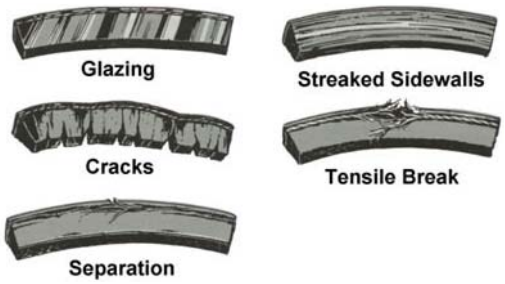

Drive Belt Replacement

1. Detach the power broom from the power unit.
2. Remove the drive pulley shield (A).

3. Remove the old drive belt.
4. Install the new drive belt over the pulley and replace the drive pulley shield.

Tire Pressure

HB580 (serial # 1001-1404) tire pressure = 25 PSI

HB580 (serial # 1405-1725) tire pressure = 40 PSI

HB580 (serial # 1726-) flat-free tires require no maintenance.

Lubrication Locations

Lubrication is required at the following locations. Refer to the maintenance schedule for service intervals and amount of grease.

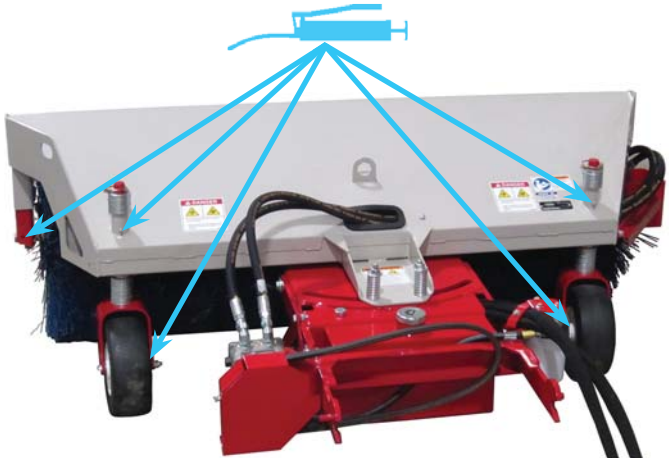

Checking Hydraulic Oil Level

Check hydraulic oil level before operating unit when the hydraulic system is cold. If the hydraulic system is warm, allow 1 hour for the hydraulic system to cool before checking. If the hydraulic system is warm when the oil level is checked, it will produce an inaccurate oil level reading.

1. Park the power broom on a level surface and allow time for the hydraulic system to cool, if necessary.
2. Remove the oil fill cap from the top of the oil tank and check the level of oil in the tank. The oil level should be maintained at the top of the main part of the tank.
3. If hydraulic oil is low, add Ventrac HydroTorq XL synthetic hydraulic oil until the proper level is reached.
4. Reinstall the oil fill cap.

Changing Hydraulic Oil & Filter

1. Park the power broom on a level surface and detach from the power unit.
2. Place a drain pan of sufficient size under the drain plug on the bottom of the oil tank.
3. Remove the drain plug to drain the oil.
4. After draining the oil, reinstall the drain plug into the oil tank.
5. Remove the filter (A) from the power broom.
6. Wipe the filter mounting surface with a clean cloth.
7. Apply a thin film of clean oil to the gasket on the new filter.

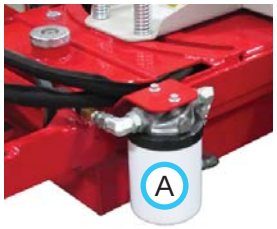

8. Install the new filter. NOTE: turn the filter clockwise until the filter gasket makes contact with the mounting surface. Tighten 1/2 - 3/4 turn after gasket contact.
9. Remove the oil fill cap from the oil tank and add Ventrac HydroTorq XL synthetic hydraulic oil until the proper level is reached.

Attention

If the hydraulic oil and/or filter is changed, the hydraulic pump must be primed before use.

10. To prime the pump, remove or loosen the supply hose at the pump. Pressurize the oil tank (3 PSI) until air is purged from the filter and hose.
11. Retighten the supply hose onto the pump fitting.
12. Recheck the hydraulic oil level and add oil if necessary.

Broom Rotor Replacement

1. Attach the power broom to the power unit.
2. Lower the broom to the ground and place the power unit's primary SDLA lever in the float position.
3. Remove the 3) 3/8" x 1" carriage bolts and flange nuts (A) from the idler end bracket (B).

4. Remove the idler end bracket from the main frame bracket.
5. Start the power unit and raise the broom just enough to pull the broom rotor to the left and off the drive hub on the right side hydraulic motor.
6. Pull the idler hub out of the left end of the rotor tube (may require prying).
7. Install the idler hub into the new broom rotor.
8. Slide the broom rotor onto the drive hub on the hydraulic motor.
9. Install the idler end bracket onto the broom rotor and then lower the broom until the holes in the idler end bracket match up with those in the main frame bracket.
10. Reinstall the 3) 3/8" X 1" carriage bolts and flange nuts. Torque to 31 ft-lbs (42 Nm).
11. Adjust the gauge wheel height setting.

Storage

Preparing the Power Broom for Storage

1. Clean the power broom.
2. Inspect for loose or missing hardware, damaged components, or signs of wear.
3. Inspect safety decals. Replace any decals that are faded, illegible, or missing.
4. Inspect hydraulic hoses and fittings to ensure tight, leak-free connections. Repair or replace any damaged or worn components.
5. Inspect drive belt for signs of damage or wear and replace as required.
6. Service all lubrication points and inspect hydraulic oil level.
7. Wipe off all excess grease or oil.

Removing the Power Broom from Storage

Inspect, clean, and prepare the power broom for use.

Maintenance Schedule

HB580 Power Broom

Maintenance Schedule	# of Locations	# of Pumps	AS NEEDED	Daily	At 50 Hours	At 100 Hours	At 150 Hours	At 200 Hours	At 250 Hours	At 300 Hours	At 350 Hours	At 400 Hours	At 450 Hours	At 500 Hours	At 550 Hours	At 600 Hours	At 650 Hours	At 700 Hours	At 750 Hours	At 800 Hours	At 850 Hours	At 900 Hours	At 950 Hours	At 1000 Hours	Yearly	5 Years or 500 Hours
Grease & Lubrication: See Lubrication Section																										
Tire Spindle Tube	2	^	**		✓	✓	✓	✓	✓	✓	✓	✓	✓	✓	✓	✓	✓	✓	✓	✓	✓	✓	✓	✓		
Wheel Axle Bearing	2	^	**		✓	✓	✓	✓	✓	✓	✓	✓	✓	✓	✓	✓	✓	✓	✓	✓	✓	✓	✓	✓		
Rotor Bearing	1	1			✓	✓	✓	✓	✓	✓	✓	✓	✓	✓	✓	✓	✓	✓	✓	✓	✓	✓	✓	✓		
Hydraulic System																										
Check Hydraulic Oil Level				✓																						
Change Hydraulic Filter																										✓
Inspection																										
Inspect for Loose, Missing, or Worn Components.				✓																						
Inspect Drive Belt, Hydraulic Hoses, & Fittings				✓																						
Check Tire Pressure (if applicable)				✓																						
Inspect Safety Decals				✓																						

** Operation in severe conditions may require more frequent service intervals.

^ Grease until fresh grease is visible.

Maintenance Checklist

HB580 Power Broom

Maintenance Checklist	# of Locations	# of Pumps	At 50 Hours	At 100 Hours	At 150 Hours	At 200 Hours	At 250 Hours	At 300 Hours	At 350 Hours	At 400 Hours	At 450 Hours	At 500 Hours	At 550 Hours	At 600 Hours	At 650 Hours	At 700 Hours	At 750 Hours	At 800 Hours	At 850 Hours	At 900 Hours	At 950 Hours	At 1000 Hours	Yearly	5 Years or 500 Hours
Grease & Lubrication: See Lubrication Section																								
Tire Spindle Tube	2	^																						
Wheel Axle Bearing	2	^																						
Rotor Bearing	1	1																						
Hydraulic System																								
Check Hydraulic Oil Level																								
Change Hydraulic Filter																								
Inspection																								
Inspect for Loose, Missing, or Worn Components.																								
Inspect Drive Belt, Hydraulic Hoses, & Fittings																								
Check Tire Pressure (if applicable)																								
Inspect Safety Decals																								

** Operation in severe conditions may require more frequent service intervals.

^ Grease until fresh grease is visible.

SPECIFICATIONS

Dimensions

Overall Height	24 inches (61 cm)
Overall Length	53 inches (135 cm)
Overall Width	68 inches (172 cm)
Overall Width (Angled to Left)	68 inches (172 cm)
Overall Width (Angled to Right)	65 inches (165 cm)
Working Width	58 inches (147 cm)
Working Width (Angled to Left)	56 inches (142 cm)
Working Width (Angled to Right)	53 inches (135 cm)
Broom Angle (Left)	22 degrees
Broom Angle (Right)	27 degrees
Weight	382 pounds (173 kg)
Broom Speed @ Engine RPM	220 @ 3200 RPM
Hydraulic Oil Capacity	4 gallons (15 L)

Features

Hydraulic angle left and right from driver’s seat

Adjustable gauge wheels

“Corner-less” frame design

Optional electric actuator for reverse rotation and slower speeds

ILLUSTRATED DRAWING
Main Frame & Rotor

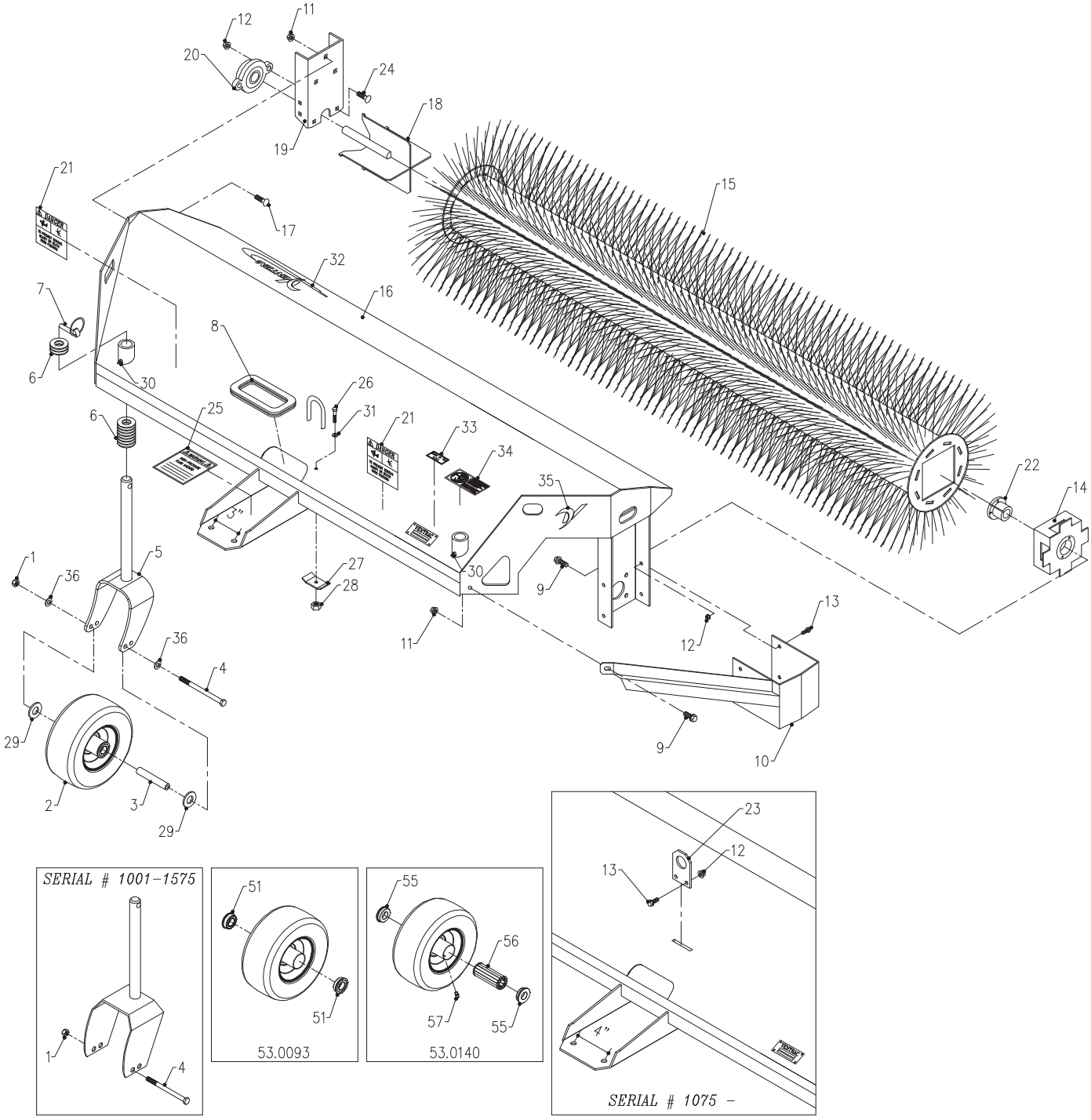

Use only original Ventrac replacement parts.

Main Frame & Rotor

REF.	PART NO.	DESCRIPTION	QTY.
1	99.A06	LOCKNUT, STOVER 3/8-16 USS (Serial # 1001-1575)	2
1	99.A06N	LOCKNUT, NYLON 3/8-16 (Serial # 1576-)	2
2	53.0092	WHEEL, ASM 2.80 X 2.50 X 4 HB580 (Serial # 1001-1404)	2
2	53.0093	WHEEL, ASM 9 X 3.50 X4 SMOOTH (Serial # 1405-1725)	2
2	53.0140	WHEEL, ASM 9 X 3.5 X4 FLATFREE (Serial # 1726-)	2
3	64.0814	BUSHING, GAUGE WHEEL AXLE HB (Serial # 1001-1404)	2
3	50.0055	TUBE, AXLE-WHEEL LM (Serial # 1405-)	2
4	90.0632	BOLT, 3/8-16 USS X 4 (Serial # 1001-1404)	2
4	90.0640	BOLT, 3/8-16 USS X 5 (Serial # 1405-1575)	2
4	90.0644	BOLT, 3/8-16 USS X 5 1/2 (Serial # 1576-)	2
5	50.0053	SPINDLE, TIRE SWIVEL HB (Serial # 1001-1404)	2
5	50.0179	FRAME, CASTER WHEEL (Serial # 1405-1575)	2
5	50.0186	SPINDLE, TIRE SWIVEL HB (Serial # 1576-)	2
6	95.16	WASHER, FLAT 1 SAE	70
7	03.0005	PIN, LYNCH	2
8	05.0049	GROMMET, RECTANGULAR	1
9	99.SF0606	BOLT, SRF 3/8-16 USS X 3/4	5
10	62.0829	COVER, HYDRA MOTOR WITH BRACE	1
11	99.SF06	NUT, SRF 3/8-16 USS	4
12	99.SF05	NUT, SRF 5/16-18 USS	8
13	99.SF0506	BOLT, SRF 5/16-18 USS X 3/4	6
14	86.0042	HUB, BRUSH DRIVE	1
15	79.0040	BRUSH, 21 OD X 58 OA FINISHED	1
16	62.0825	FRAME, MAIN WELDMENT	1
17	97.0608	BOLT, CARRIAGE 3/8 X 1	3
18	86.0041	HUB, BRUSH IDLER	1
19	64.0791	PLATE, BRUSH IDLER BEARING MT	1
20	55.FB16016	BEARING, FLANGE BLOCK 1” REGZK	1
21	00.0102	DECAL, DANGER-PINCHING HAZARD	2
22	83.H16S	BUSHING, 1” SPLIT 1/4” KEY	1
23	64.0984	PLATE, LIFT RING	1
24	97.0508	BOLT, CARRIAGE 5/16 X 1	2
25	00.0103	DECAL, HAZARD-HIGH PRESS.FLUID	1
26	90.0416	BOLT, 1/4-20 USS X 2	1
27	64.0673	CLAMP, HYDRAULIC HOSE	1
28	99.A04	LOCKNUT, STOVER 1/4-20 USS	1
29	95.12	WASHER, FLAT 3/4 SAE	A/R
30	29.GF0001	GREASE FTG, 1/4 SAE ST	2
31	95.04	WASHER, FLAT 1/4 SAE	1
32	00.0189	DECAL, VENTRAC ORBITAL	1
33	00.0100	DECAL, MADE IN USA	1
34	00.0217	DECAL, WARNING READ OWNERS MAN	1
35	00.0192	DECAL, V-DECAL DIE CUT BLUE	1
36	95.06	WASHER, FLAT 3/8 SAE (Serial # 1576-)	4
51	55.0060	BEARING, DOUBLE-SEALED	2
55	55.0072	BEARING, RETAINER 3/4”	2
56	55.0071	BEARING, ROLLER 3.25” LONG	1
57	29.GF0001	GREASE FTG, 1/4 SAE ST	1

Use only original Ventrac replacement parts.

ILLUSTRATED DRAWING

Hitch Frame

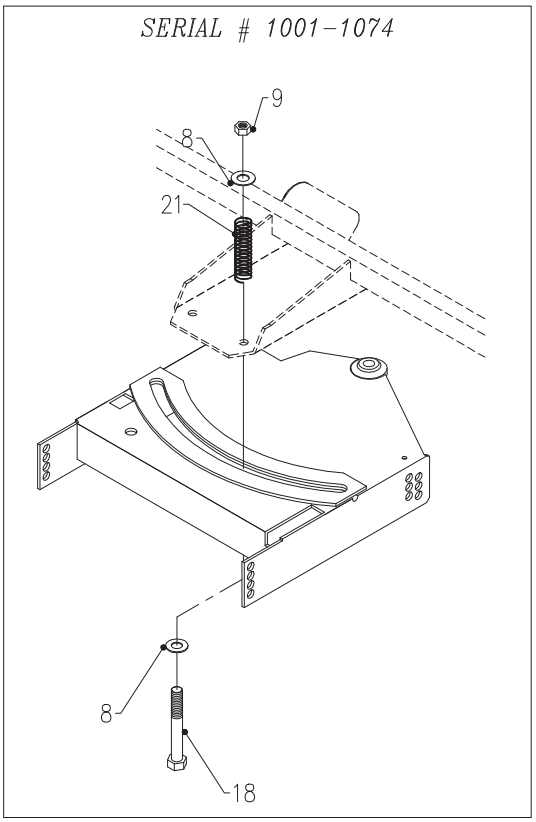

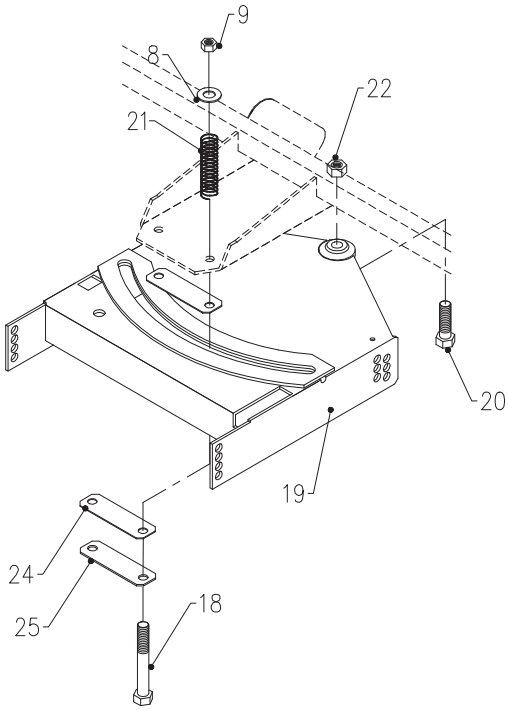

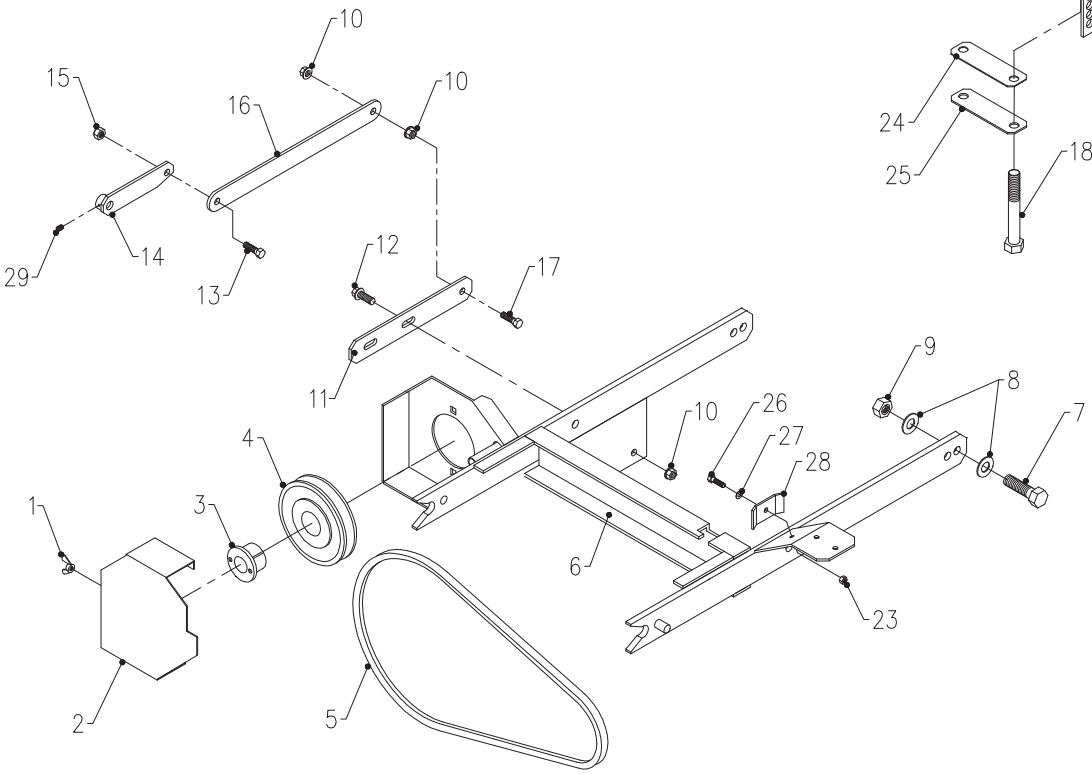

Use only original Ventrac replacement parts.

Hitch Frame

REF.	PART NO.	DESCRIPTION	QTY.
1	99.E0004	NUT, WING 1/4-20 USS	1
2	60.0721	SHIELD, DRIVE PULLEY	1
3	83.H15M	BUSHING, 15 MM H-BUSH	1
4	83.BK60H	PULLEY, 6” H-BUSH	1
5	81.B048	BELT, B48	1
6	62.0827	FRAME, HITCH WITH PUMP MOUNT	1
7	90.0812	BOLT, 1/2-13 USS X 1 1/2	4
8	94.08	WASHER, FLAT 1/2 USS	10
9	99.A08	LOCKNUT, STOVER 1/2-13 USS	6
10	99.SF06	NUT, SRF 3/8-16 USS	4
11	42.0421	LINK, ACTUATOR MT (Serial # 1001-1949)	1
11	42.0564	LINK, ACTUATOR MOUNT (Serial # 1950-)	1
12	99.SF0606	BOLT, SRF 3/8-16 USS X 3/4	2
13	90.0608	BOLT, 3/8-16 USS X 1	1
14	40.0265	LEVER, PUMP CONTROL (Serial # 1001-1949)	1
14	40.0391	LEVER, PUMP CONTROL (Serial # 1950-)	1
15	99.A06	LOCKNUT, STOVER 3/8-16 USS	1
16	42.0424	LINK, MANUAL PUMP CONTROL	1
17	90.0610	BOLT, 3/8-16 USS X 1 1/4	1
18	90.0832	BOLT, 1/2-13 USS X 4	2
19	62.0826	FRAME, CENTER SUB	1
20	90.1018	BOLT, 5/8-11 USS X 2 1/4	1
21	41.0062	SPRING, 1.14 OD X 2.84 ZP	2
22	99.A10	LOCKNUT, STOVER 5/8-11 USS	1
23	99.A04	LOCKNUT, STOVER 1/4-20 USS	1
24	44.0183	SLIDE, 1/16 X 1-1/2 X 5 HDPE	2
25	64.0884	BRACKET, BACKER PLASTIC SLIDE	1
26	90.0410	BOLT, 1/4-20 USS X 1 1/4	1
27	95.04	WASHER, FLAT 1/4 SAE	1
28	64.0673	CLAMP, HYDRAULIC HOSE	1
29	85.SS11	SET SCREW, 1/4-28 X 3/8”	2

Use only original Ventrac replacement parts.

ILLUSTRATED DRAWING
Hydraulic Drive

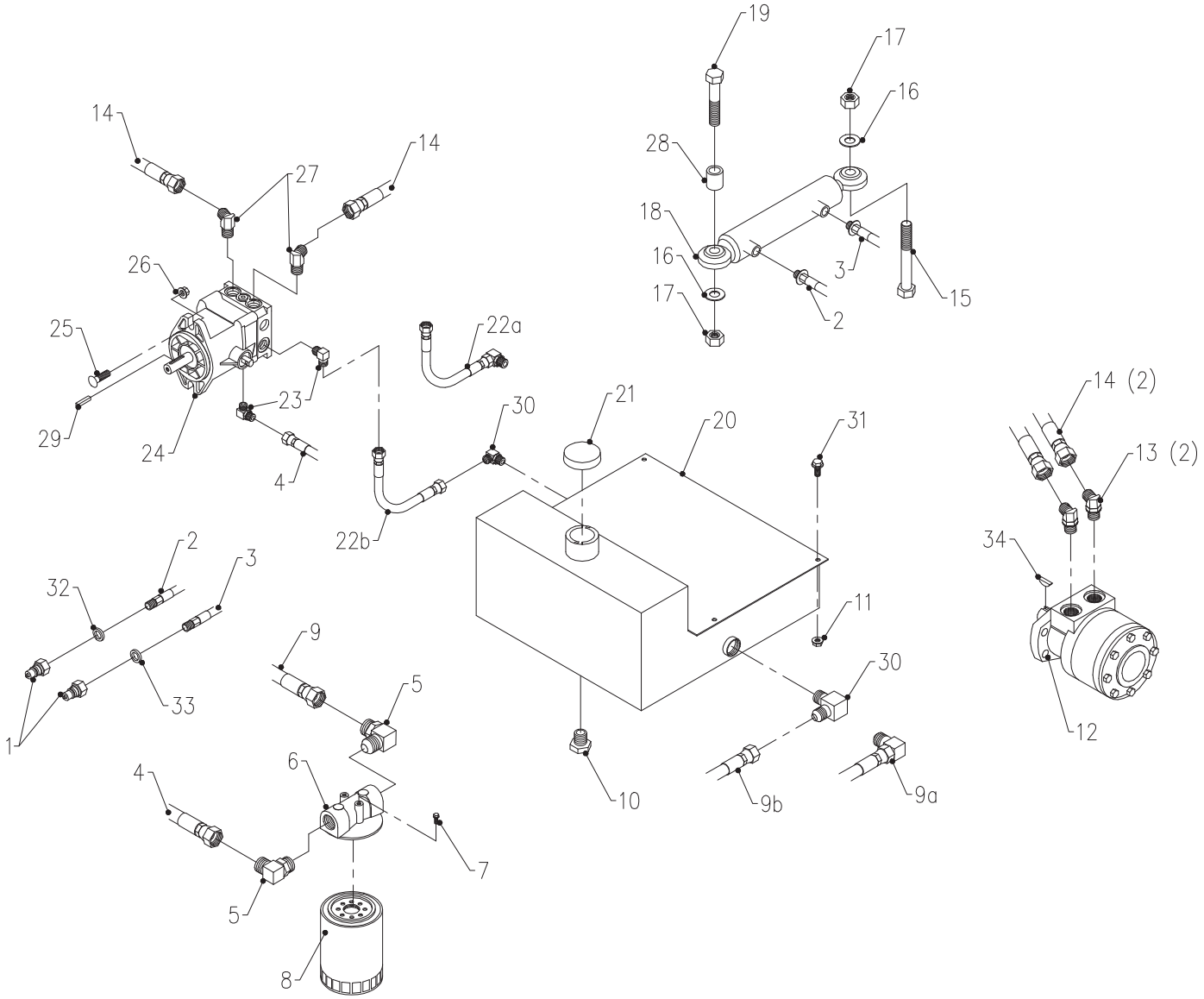

Use only original Ventrac replacement parts.

Hydraulic Drive

REF.	PART NO.	DESCRIPTION	QTY.
1	23.0104	COUPLER, QUICK MALE 1/4	2
2	20.0165	HOSE, ASM X 50” 1/4-1W (Serial # 1001-1134)	1
2	20.0206	HOSE, 1/4X50.00 SAE 100R17 AR (Serial # 1135-)	1
3	20.0152	HOSE, ASM X 54” 1/4-1W (Serial # 1001-1134)	1
3	20.0204	HOSE, 1/4X52.00 SAE 100R17 AR (Serial # 1135-)	1
4	22.0022	HOSE, 3/8X26.00 PLK 250PSI CPE	1
5	25.2501-06-08	FITTING, 90 ME 3/8 X 1/2 (Serial # 1001-1571)	2
5	25.6801-06-08	FITTING, 90 ME 3/8 X 1/2 (Serial # 1572-)	2
6	21.0082	FILTER, HEAD 1/2” NPT PORT (Serial # 1001-1571)	1
6	21.0115	FILTER, HEAD 08 SAE PORT (Serial # 1572-)	1
7	99.SF0404	BOLT, SRF 1/4-20 X 1/2	2
8	21.0001	FILTER, HYDRAULIC ZINGA AE25	1
9a	22.0023	HOSE, ASM X 9” 3/8 PUSH LOCK (Serial # 1001-1338)	1
9b	22.0041	HOSE, 3/8X9.50 PLK 250PSI CPE (Serial # 1339-)	1
10	29.P06H	PIPE, PLUG 3/8 HEX ZP	1
11	99.SF04	NUT, SRF 1/4-20 USS (Serial # 1001-1515)	4
11	99.SF05	NUT, SRF 5/16-18 USS (Serial # 1516-)	4
12	21.0085	MOTOR, HYD. CHARLYNN 9.7 CU. (Serial # 1001-1571)	1
	89.0065	KIT, SEAL FOR 21.0085 MOTOR	1
12	21.0118	MOTOR, HYD. PARKER 10.6 CU/REV (Serial # 1572-)	1
	89.0034	KIT, SEAL PARKER-NICH. MOTORS	1
13	25.6802-08-10	FITTING, 45 ME 1/2 X 5/8	2
14	20.0151	HOSE, 1/2X70.00 SAE 100R17 AR	2
15	90.1052	BOLT, 5/8-11 USS X 6 1/2	1
16	95.10	WASHER, FLAT 5/8 SAE	2
17	99.A10	LOCKNUT, STOVER 5/8-11 USS	2
18	23.0100	CYLINDER, 1-1/2 X 5, 1/4 NPT (Serial # 1001-1134)	1
18	23.0130	CYLINDER, 1-1/2” X 5” (Serial # 1135-)	1
19	90.1026	BOLT, 5/8-11 USS X 3 1/4	1
20	62.0828	TANK, OIL	1
21	47.0141	CAP, FILL 2” CHROME PLATED	1
22a	22.0020	HOSE, ASM X 12” 3/8 PUSH LOCK (Serial # 1001-1338)	1
22b	22.0042	HOSE, 3/8X11.50 PLK 250PSI CPE (Serial # 1339-)	1
23	25.6801-06-06	FITTING, 90 ME 3/8 X 3/8	2
24	21.0095	PUMP, HYD. HYDROGEAR	1
25	97.0608	BOLT, CARRIAGE 3/8 X 1	2
26	99.SF06	NUT, SRF 3/8-16 USS	2
27	25.6802-08-08	FITTING, 45 ME 1/2 X 1/2	2
28	64.0813	SPACER, 11/16 X 1 X 1-1/8L	1
29	85.K508	KEY, 5MM SQ X 1”	1
30	25.2501-06-06	FITTING, 90 ME 3/8 X 3/8 (Serial # 1339-)	2
31	99.SF0406	BOLT, SRF 1/4-20 X 3/4 (Serial # 1001-1515)	4
31	99.SF0506	BOLT, SRF 5/16-18 USS X 3/4 (Serial # 1516-)	4
32	05.0117	WASHER, .544ID X .817 X.14 YEL	1
33	05.0116	WASHER, .544ID X .817 X.14 RED	1
34	85.W0408	KEY, WOODRUFF 1/4 X 1	1

Use only original Ventrac replacement parts.

ILLUSTRATED DRAWING
70.8025 Optional 12V Electric Actuator

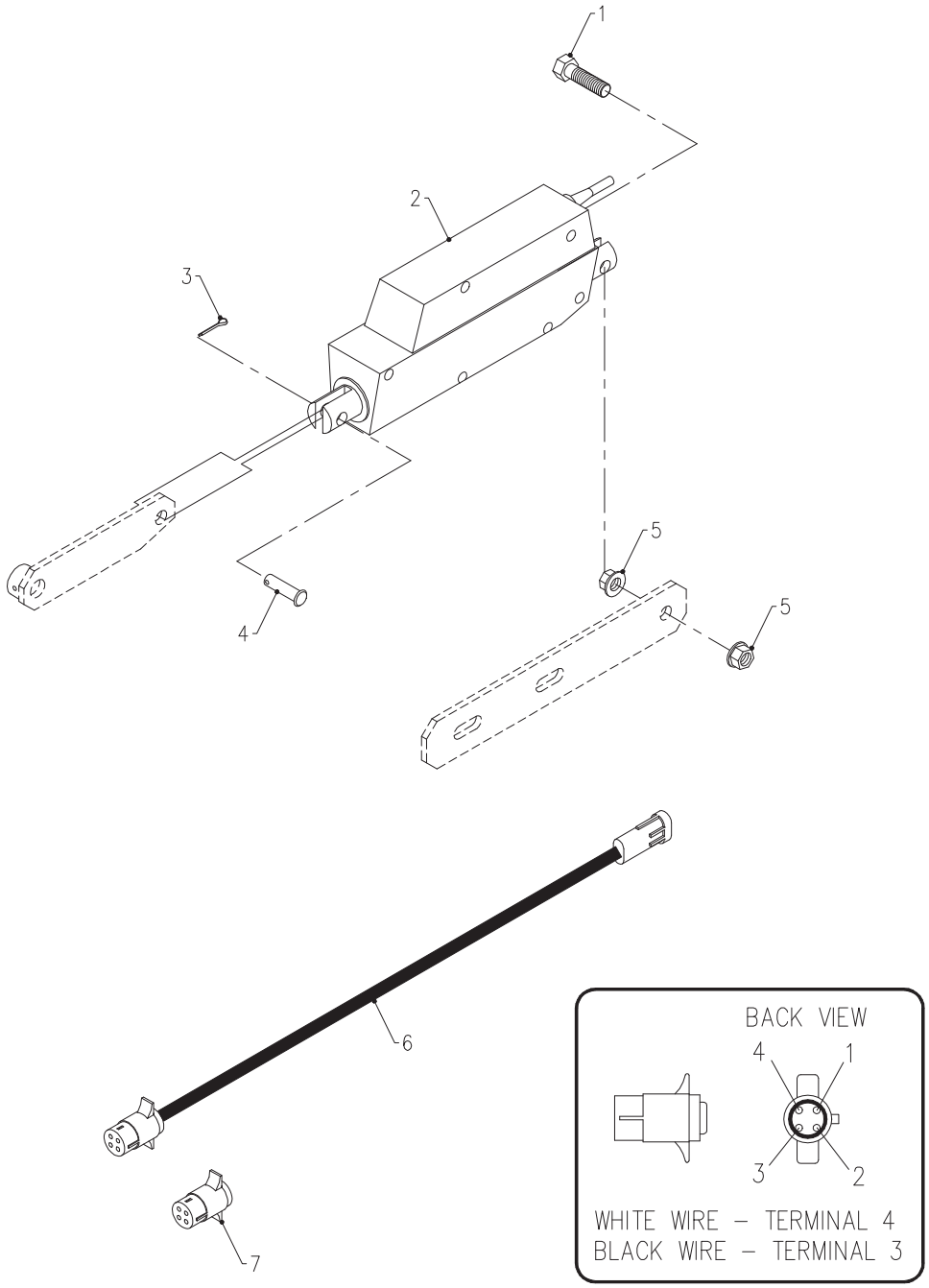

Use only original Ventrac replacement parts.

70.8025 Optional 12V Electric Actuator

REF.	PART NO.	DESCRIPTION	QTY.
1	90.0616	BOLT, 3/8-16 USS X 2	1
2	70.8025	KIT, 12V ACTUATOR, HB/KX	1
3	02.CP0306	COTTER PIN, 3/32 X 3/4	1
4	03.0610	CLEVIS PIN, 3/8 X 1 1/4 ZP	1
5	99.SF06	NUT, SRF 3/8-16 USS	2
6	32.0074	HARNESS, 12 V ACTUATOR HB/KX	1
7	30.0218	PLUG, TRAILER 4-PIN MALE	1

Use only original Ventrac replacement parts.

WARRANTY

LIMITED WARRANTY - VENTRAC TURF EQUIPMENT

Venture Products, Inc. (shall be referred to as V.P.I.) warrants on the terms and conditions herein, that it will repair, replace, or adjust any part manufactured by Venture Products Inc. and found by Venture Products Inc. to be defective in material and / or workmanship.

Effective September 1st 2005, Ventrac warranty on power units & attachments (excluding the HG100/HG150 generator) for **residential use only** is limited to **three (3) years** from original purchase date. Ventrac power units & attachments used **commercially or for any income-producing purpose** is limited to **two (2) years** from original purchase date. Ventrac ET200 turbine blower (turbine only) is limited to **two (2) years** from original purchase date. Ventrac HG100/HG150 generator is limited to **one (1) year** from original purchase date. Ventrac power units & attachments used for **rental** is limited to **180 days** from original purchase date. (**NOTE:** All accessories such as: 3-point hitch, foot pedal, dual wheel kit, etc. will be covered under the above warranty periods as they would apply provided they are installed by an authorized Ventrac dealer.) This warranty may be transferred and will carry the remainder of the warranty starting from the original purchase/registration date with the dealership and/or V.P.I. In the event that product/s originally registered as **(3) year residential use** are to be transferred to a commercial user, the warranty would change to the remainder of **(2) year commercial use** starting from the original purchase/registration date with the dealership and/or V.P.I.

If this warranty covers a consumer product as defined by the Magnusson-Moss warranty act, no warranties, express or implied, (including, but not limited to, the warranty of merchantability or fitness for a particular purpose) shall extend beyond the applicable time period stated in bold face type above.

If this warranty covers a product used commercially or for any income producing purpose, the foregoing warranties are in lieu of all other warranties and no representations, guarantees or warranties, express or implied, (including, but not limited to, a warranty of merchantability or fitness for a particular purpose), are made by V.P.I. in connection with the manufacture or sale of its products.

The engine warranty is covered by its respective engine manufacturer. Please refer to the engine manufacturer's warranty statement that is included in the owner's manual.

The Ventrac turf equipment, including any defective parts, must be returned to an authorized Ventrac dealer within the warranty period. The warranty shall extend to the cost to repair or replace (as determined by V.P.I.) the defective part. **The expense of pickup and delivery of equipment, service call drive time or any transportation expense incurred for warranty repair is the sole responsibility of the owner and is not covered under warranty by Ventrac and/or V.P.I.** V.P.I.'s responsibility in respect to claims is limited to making the required repairs or replacements, and no claim of breach of warranty shall be cause for cancellation or rescission of the contract of sale of any Ventrac equipment. Proof of purchase may be required by the dealer to substantiate any warranty claim. Only warranty work performed and submitted by an authorized Ventrac dealer may be eligible for warranty credit.

This warranty extends only to Ventrac turf equipment operated under normal conditions and properly serviced and maintained. The warranty expressly does **not** cover: (a) any defects, damage or deterioration due to normal use, wear and tear, or exposure; (b) normal maintenance services, such as cleaning, lubrication, oil change; (c) replacement of service items, such as oil, lubricants, spark plugs, belts, rubber hoses or other items subject to normal service replacement; (d) damage or defects arising out of, or relating to abuse, misuse, neglect, alteration, negligence or accident; (e) repair or replacement arising from operation of, or use of the turf equipment which is not in accordance with operating instructions as specified in the operator's manual or other operational instructions provided by V.P.I.; (f) repair or replacement arising as a result of any operation from Ventrac turf equipment that has been altered or modified so as to, in the determination of V.P.I., adversely affect the operation, performance or durability of the equipment

WARRANTY

LIMITED WARRANTY - VENTRAC TURF EQUIPMENT

or that has altered, modified or affected the turf equipment so as to change the intended use of the product; (g) repair or replacement necessitated by the use of parts, accessories or supplies, including gasoline, oil or lubricants, incompatible with the turf equipment or other than as recommended in the operator's manual or other operational instructions provided by V.P.I.; (h) repairs or replacements resulting from parts or accessories which have adversely affected the operation, performance or durability of the turf equipment; or (i) damage or defects due to or arising out of repair of Ventrac turf equipment by person or persons other than an authorized Ventrac service dealer or the installation of parts other than genuine Ventrac parts or Ventrac recommended parts.

The sole liability of V.P.I. with respect to this warranty shall be repair and replacement as set forth herein. V.P.I. shall have no liability for any other cost, loss, or damage. In particular V.P.I shall have no liability or responsibility for: (i) expenses relating to gasoline, oil, lubricants; (ii) loss, cost, or expense relating to transportation or delivery of turf equipment from the location of owner or location where used by owner to or from any authorized Ventrac dealer; (iii) travel time, overtime, after hours time or other extraordinary repair charges or charge relating to repairs or replacements outside of normal business hours at the place of business of an authorized Ventrac dealer; (iv) rental of like or similar replacement equipment during the period of any warranty repair or replacement work; (v) any telephone or telegram charges; (vi) loss or damage to person or property other than that covered by the terms of this warranty; (vii) any claims for lost revenue, lost profit or additional cost or expense incurred as a result of a claim of breach of warranty; or (viii) attorney's fees.

The remedies of buyer set forth herein are exclusive and are in lieu of all other remedies. The liability of V.P.I., whether in contract, tort, under any warranty, or otherwise, shall not extend beyond its obligation as set forth herein. V.P.I. shall not be liable for cost of removal or installation nor shall V.P.I. be responsible for any direct, indirect, special or consequential damages of any nature. In no event shall V.P.I. be liable for any sum in excess of the price received for the goods for which liability is claimed.

There are no representations or warranties which have been authorized to the buyer of the turf equipment other than set forth in this warranty. Any and all statements or representations made by any seller of this equipment, including those set forth in any sales literature or made orally by any sales representative, are superseded by the terms of this warranty. Any affirmation of fact or promise made by V.P.I. or any of its representatives to the buyer which relates to the goods that are the subject to this warranty shall not be regarded as part of the basis of the bargain and shall not be deemed to create any express warranty that such goods shall conform to the affirmation or promise.

No employee, distributor, or representative is authorized to change the foregoing warranties in any way or grant any other warranty on behalf of V.P.I.

Some states do not allow limitations on how long an implied warranty lasts or allow the exclusion on limitation of incidental or consequential damages, so the above limitation or exclusion may not apply to you.

This warranty gives you specific legal rights, and you may also have other rights which vary from state to state.

This warranty applies to all Ventrac turf equipment sold in the United States and Canada.