Operator's Manual & Parts Drawings

Slip Scoop

Model HE300 / HE480

by Venture Products Inc.

VENTRAC® MOUNT SYSTEM

Revised 12/20/11
09.10009

328 East Water St.
PO Box 148
Orrville Oh 44667
www.ventrac.com

To the Owner
Contact Information and Product Identification

If you need to contact an authorized Ventrac dealer for information on servicing your product, always provide the product model and serial numbers.

Please fill in the following information for future reference. See the picture(s) below to find the location of the identification numbers. Record them in the spaces provided.

Date of Purchase: _____

Dealer: _____

Dealer Address: _____

_____

Dealer Phone Number: _____

Dealer Fax Number: _____

Model # (A): _____

Serial # (B): _____

Affix Part/Serial Number label here.

Venture Products Inc. reserves the right to make changes in design or specifications without obligation to make like changes on previously manufactured products.

TABLE OF CONTENTS

INTRODUCTION PAGE 4

Product Description....4
Why Do I Need an Operator's Manual?....4
Using Your Manual....5
Manual Glossary....5

SAFETY PAGE 6

Safety Decals....6
General Safety Procedures....7
Training Required....7
Personal Protective Equipment Requirements....7
Operating Safely....7
Preventing Accidents....8
Keep Riders Off....8
Operating On Slopes....9
Roadway Safety....9
Truck Or Trailer Transport....9
Maintenance....10
Fuel Safety....10
Hydraulic Safety....11
HE300 & HE480 Safety Procedures....12

GENERAL OPERATION PAGE 13

Daily Inspection....13
Attaching....13
Detaching....13
Moving Loose or Soft Materials....13
Smoothing and Leveling Loose Materials....14

SERVICE PAGE 15

Cleaning and General Maintenance....15
Lubrication Locations....15
Storage....15
Maintenance Schedule....16
Maintenance Checklist....16

SPECIFICATIONS PAGE 17

HE300 Dimensions....17
HE480 Dimensions....17

PARTS PAGE 18

HE300 Slip Scoop....18
HE480 Slip Scoop....20

WARRANTY PAGE 22

INTRODUCTION

Venture Products Inc. is pleased to provide you with your new Ventrac slip scoop! We hope that Ventrac equipment will provide you with a ONE Tractor Solution.

Product Description

Ventrac slip scoops are designed solely for the purposes of scooping and moving materials such as soil, mulch, and gravel.

Ventrac slip scoops are hydraulically controlled from the driver's seat, allowing for smooth effortless operation. The slip scoop is designed to sit upright after detachment, with the lift arms in the proper position for direct reattachment when the scoop is used again.

If the Ventrac slip scoop is used on a power unit that is equipped with a weight transfer system, increasing the weight transferred to the power unit will increase the lifting capacity of the scoop.

To balance the power unit and to keep all wheels securely on the ground when using the slip scoop, adequate rear ballast or an appropriate implement mounted on the 3-point hitch is recommended. When using the slip scoop on the optional "3-n-1" 3-point hitch attachment in the rear, adequate front ballast or an appropriate implement mounted on the front hitch is recommended.

Why Do I Need an Operator's Manual?

This manual has been created to help you gain the important knowledge of what is needed to safely operate, maintain, and service your machine. It is divided into sections for convenient reference of the appropriate section.

You must read and understand the operator's manual for each piece of Ventrac equipment you own. Reading the operator's manual will help you become familiar with each specific piece of equipment. Understanding the operator's manual will help you, as well as others, avoid personal injury and/or damage to the equipment. Keep this manual with the machine at all times. The manual should remain with the machine even if it is sold. If this manual becomes damaged or unreadable, it should be replaced immediately. Contact your local Ventrac dealer for a replacement.

When using a Ventrac attachment, be sure to read and follow the safety and operating instructions of both the power unit and the attachment being used to ensure the safest operation possible.

The information in this manual provides the operator with the safest procedures to operate the machine while getting the maximum use out of the unit. Failure to follow the safety precautions listed in this manual may result in personal injury and/or damage to the equipment.

INTRODUCTION

Using Your Manual

Throughout this manual, you will encounter special messages and symbols that identify potential safety concerns to help you as well as others avoid personal injury or damage to the equipment.

SYMBOL DEFINITIONS

ATTENTION

This symbol identifies potential health and safety hazards. It marks safety precautions. Your safety and the safety of others is involved.

There are three signal words that describe the level of safety concern: Danger, Warning, and Caution. Safety should always be the #1 priority when working on or operating equipment. Accidents are more likely to occur when proper operating procedures are not followed or inexperienced operators are involved.

Note: Right-Hand and Left-Hand orientations may be referred to at different places throughout this manual. Right-Hand and Left-Hand is determined as if sitting on the power unit seat facing forward.

SIGNAL WORD DEFINITIONS

⚠ DANGER

Indicates an imminently hazardous situation which, if not avoided, will result in death or serious injury. This signal word is limited to the most extreme cases.

⚠ WARNING

Indicates a potentially hazardous situation which, if not avoided, could result in death or serious injury.

⚠ CAUTION

Indicates a potentially hazardous situation which, if not avoided, may result in minor or moderate injury and/or property damage. It may also be used to alert against unsafe practices.

Manual Glossary

Power Unit A Ventrac tractor or other Ventrac engine powered device that may be operated by itself or with an attachment or accessory.

Attachment A piece of Ventrac equipment that requires a Power Unit for operation.

Accessory A device that attaches to a Power Unit or Attachment to extend its capabilities.

Machine Describes any “Attachment” or “Accessory” that is used in conjunction with a power unit.

Safety Decals

The following safety decals must be maintained on your HE300 or HE480 slip scoop.

Keep all safety decals legible. Remove all grease, dirt, and debris from safety decals and instructional labels. If any decals are faded, illegible, or missing, contact your dealer promptly for replacements.

When new components are installed, be sure that current safety decals are affixed to the replacement components.

A

B

C

Decal	Description	Part Number	Quantity
A	Danger, Pinching Hazard	00.0102	1
B	Warning, High Pressure Fluid	00.0103	1
C	Warning, Read Owner's Manual	00.0217	1

General Safety Procedures for Ventrac Power Units, Attachments, & Accessories

Training Required

- The owner of this machine is solely responsible for properly training the operators.
- The owner/operator is solely responsible for the operation of this machine and prevention of accidents or injuries occurring to him/herself, other people, or property.
- Do not allow operation or service by children or untrained personnel. Local regulations may restrict the age of the operator.
- Before operating this machine, read the operator's manual and understand its contents.
- If the operator of the machine cannot understand this manual, then it is the responsibility of this machine's owner to fully explain the material within this manual to the operator.
- Learn and understand the use of all controls.
- Know how to stop the power unit and all attachments quickly in the event of an emergency.

Personal Protective Equipment Requirements

It is the responsibility of the owner to be sure that the operators use the proper personal protective equipment while operating the machine. Required personal protective equipment includes, but is not limited to, the following list.

- Wear a certified ear protection device to prevent loss of hearing.
- Prevent eye injury by wearing safety glasses while operating the machine.
- Closed toe shoes must be worn at all times.
- Long pants must be worn at all times.
- When operating in dusty conditions, it is recommended that a dust mask be worn.

Operating Safely

- Inspect machine before operation. Repair or replace any damaged, worn, or missing parts. Be sure guards and shields are in proper working condition and are secured in place. Make all necessary adjustments before operating machine.
- Alterations or modifications to this machine can reduce safety and could cause damage to the machine. Do not alter safety devices or operate with shields or covers removed.
- Before each use, verify that all controls function properly and inspect all safety devices. Do not operate if controls or safety devices are not in proper working condition.
- Check parking brake function before operating. Repair or adjust parking brake if necessary.
- Observe and follow all safety decals.
- All controls are to be operated from the operator's seat only.
- Always wear a seat belt if the machine has a roll cage/bar installed.
- Ensure the attachment or accessory is locked or fastened securely to the power unit before operating.
- Ensure that all bystanders are clear of the power unit and attachment before operating. Stop machine if someone enters your work area.
- Always be alert to what is happening around you, but do not lose focus on the task you are performing. Always look in the direction the machine is moving.
- Look behind and down before backing up to be sure of a clear path.
- If you hit an object, stop and inspect the machine. Make all necessary repairs before operating machine again.
- Stop operation immediately at any sign of equipment failure. An unusual noise can be a warning of equipment failure or a sign that maintenance is required. Make all necessary repairs before operating machine again.
- If equipped with a high/low range feature, never shift between high and low range while on a slope. Always move the machine to level ground and place the selector lever in park before shifting range.

General Safety Procedures for Ventrac Power Units, Attachments, & Accessories

Operating Safely (continued)

- Do not leave machine unattended while it is running.
- Always park the machine on level ground.
- Always shut off engine when connecting attachment drive belt to the power unit.
- Never leave the operator's seat without lowering the attachment to the ground, setting the parking brake, shutting off the engine, and removing the ignition key. Make sure all moving parts have come to a complete stop before dismounting.
- Never leave equipment unattended without lowering the attachment to the ground, setting the parking brake, shutting off the engine, and removing the ignition key.
- Only operate in well-lit conditions.
- Never direct the discharge of any attachment in the direction of people, buildings, animals, vehicles, or other objects of value.
- Never discharge material against a wall or obstruction. Material may ricochet back towards the operator.
- Use extra caution when approaching blind corners, shrubs, trees, or other objects that may obscure vision.
- Do not run the engine in a building without adequate ventilation.
- Do not touch the engine or the muffler while the engine is running or immediately after stopping the engine. These areas may be hot enough to cause a burn.
- Do not change the engine governor settings or over-speed the engine. Operating engine at excessive speed may increase the hazard of personal injury.
- To reduce the hazard of fire, keep the battery compartment, engine, and muffler areas free of grass, leaves, and excessive grease.

Preventing Accidents

- Clear working area of objects that might be hit or thrown from machine.
- Keep people and pets out of mowing area.
- Know the work area well before operation. Do not operate where traction or stability is questionable.
- Reduce speed when you are operating over rough ground.
- Equipment can cause serious injury and/or death when improperly used. Before operating, know and understand the operation and safety of the power unit and the attachment being used.
- Do not operate machine if you are not in good physical and mental health, if you will be distracted by personal devices, or are under the influence of any substance which might impair decision, dexterity, or judgment.
- Children are attracted to machine activity. Be aware of children and do not allow them in the working area. Turn off the machine if a child enters the work area.

Keep Riders Off

- Only allow the operator on the power unit. Keep riders off.
- Never allow riders on any attachment or accessory.

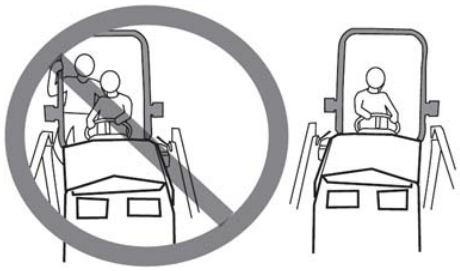

General Safety Procedures for Ventrac Power Units, Attachments, & Accessories

Operating On Slopes

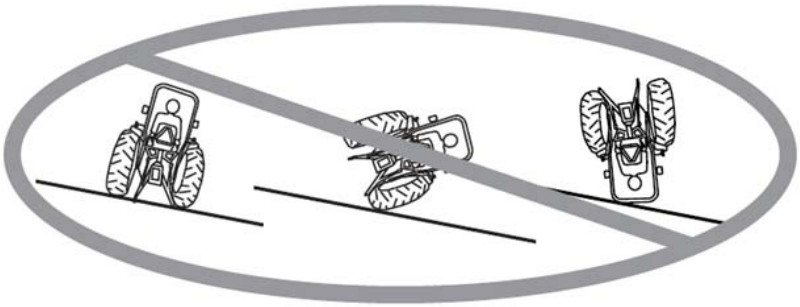

- Slopes can cause loss-of-control and tip-over accidents, which can result in severe injury or death. Be familiar with the emergency parking brake, along with the power unit controls and their functions.
- If power unit is equipped with a fold down roll bar, it must be locked in the upright position when operating on any slope.
- Use low range when operating on slopes greater than 15 degrees.
- Do not stop or start suddenly when operating on slopes.
- Never shift between high and low range while on a slope. Always move the power unit to level ground and place the selector lever in park before shifting range.
- Variables such as wet surface and loose ground will reduce the degree of safety. Do not drive where machine could lose traction or tip over.
- Keep alert for hidden hazards in the terrain.
- Stay away from drop-offs, ditches, and embankments.
- Sharp turns should be avoided when operating on slopes.
- Pulling loads on hills decreases safety. It is the responsibility of the owner/operator to determine loads that can safely be controlled on slopes.
- Transport machine with attachment lowered or close to the ground to improve stability.
- While operating on slopes, drive in an up and down direction when possible. If turning is necessary while driving across slopes, reduce speed and turn slowly in the downhill direction.
- Assure a sufficient supply of fuel for continuous operation. A minimum of one-half tank of fuel is recommended.

Roadway Safety

- Operate with safety lights when operating on or near roadways.
- Obey all state and local laws concerning operation on roadways.
- Slow down and be careful of traffic when operating near or crossing roadways. Stop before crossing roads or sidewalks. Use care when approaching areas or objects that may obscure vision.
- If there is doubt of safety conditions, discontinue machine operation until a time when operation can be performed safely.
- When operating near or on roadways, have a Slow Moving Vehicle Emblem clearly displayed.

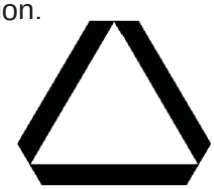

Truck Or Trailer Transport

- Use care when loading or unloading machine into a truck or trailer.
- The parking brake is not sufficient to lock the machine during transport. Always secure the power unit and/or attachment to the transporting vehicle.
- Shut off fuel supply to power unit during transport on truck or trailer.

General Safety Procedures for Ventrac Power Units, Attachments, & Accessories

Maintenance

- Keep all safety decals legible. Remove all grease dirt, and debris from safety decals and instructional labels.
- If any decals are faded, illegible, or missing, contact your dealer promptly for replacements.
- When new components are installed, be sure that current safety decals are affixed to the replacement components.
- If any component requires replacement, use only original Ventrac replacement parts.
- Always disconnect the negative battery cable from the battery when working with electrical components.
- Keep all bolts, nuts, screws, and other fasteners properly tightened.
- Always lower the attachment to the ground, engage parking brake, shut off engine, and remove the ignition key. Make sure all moving parts have come to a complete stop before cleaning, inspection, adjusting or repairing.
- If the power unit, attachment, or accessory requires repairs or adjustments not instructed in the operator's manual, the power unit, attachment, or accessory must be taken to an authorized Ventrac dealer for service.
- Never perform maintenance on the power unit and/or attachment if someone is sitting in the operator's seat.
- Always use protective glasses when handling the battery.
- Check all fuel lines for tightness and wear on a regular basis. Tighten or repair them as needed.
- To reduce the hazard of fire, keep the battery compartment, engine, and muffler areas free of grass, leaves, and excessive grease.
- Do not touch the engine or the muffler while the engine is running or immediately after stopping the engine. These areas may be hot enough to cause a burn.
- Do not change the engine governor settings or over-speed the engine. Operating engine at excessive speed may increase the hazard of personal injury.
- Springs may contain stored energy. Use caution when disengaging or removing springs.
- An obstruction or blockage in a drive system or moving/rotating parts may cause a buildup of stored energy. When the obstruction or blockage is removed, the drive system or moving/rotating parts may move suddenly. Do not attempt to remove an obstruction or blockage with your hands. Keep hands, feet, and clothing away from all power-driven parts.
- Dispose of all fluids in accordance with local laws.

Fuel Safety

- Do not refuel machine while smoking or at a location near flames or sparks.
- Always refuel the machine outdoors.
- Do not store machine or fuel container indoors where fumes or fuel can reach an open flame, spark, or pilot light.
- Only store fuel in an approved container. Keep out of reach of children.
- Never remove gas cap or add fuel with the engine running. Allow engine to cool before refueling.
- Replace all fuel tank and container caps securely.
- Do not overfill fuel tank.
- If fuel is spilled, do not attempt to start the engine. Move the power unit away from the fuel spill and avoid creating any source of ignition until fuel vapors have dissipated.
- If the fuel tank must be drained, it should be drained outdoors into an approved container.
- Dispose of all fluids in accordance with local laws.
- Check all fuel lines for tightness and wear on a regular basis. Tighten or repair them as needed.
- The fuel system is equipped with a shut-off valve. Shut off the fuel when transporting the machine to and from the job, when parking the machine indoors, or when servicing the fuel system.

General Safety Procedures for Ventrac Power Units, Attachments, & Accessories

Hydraulic Safety

- Make sure all hydraulic connections are tight and all hydraulic hoses and tubes are in good condition. Repair any leaks and replace any damaged or deteriorated hoses or tubes before starting the machine.
- Hydraulic leaks can occur under high pressure. Hydraulic leaks require special care and attention.
- Use a piece of cardboard and a magnifying glass to locate suspected hydraulic leaks.

- Keep body and hands away from pinhole leaks or nozzles that eject high pressure hydraulic fluid. Hydraulic fluid escaping under high pressure can penetrate the skin causing serious injury. If hydraulic fluid is injected into skin, seek immediate medical attention.

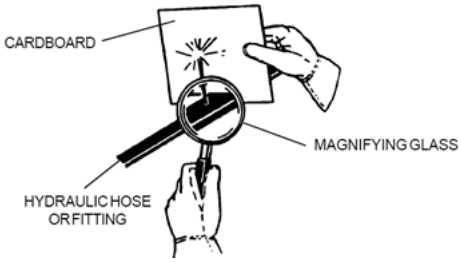

- Hydraulic system may contain stored energy. Before performing maintenance or repairs on the hydraulic system, remove attachments, engage parking brake, disengage weight transfer system (if equipped), shut off engine, and remove ignition key. To relieve pressure on the auxiliary hydraulic system, shut off the power unit engine and move the secondary S.D.L.A. lever left and right before disconnecting the auxiliary hydraulic quick couplers.
- Dispose of all fluids in accordance with local laws.

HE300 & HE480 Safety Procedures

- Attachment hydraulic system may contain stored energy. Before performing maintenance or repairs on the hydraulic system, the attachment's auxiliary hydraulic hoses must be disconnected from the power unit. Lower the attachment to the ground, shut off power unit engine, move the secondary S.D.L.A. lever left and right to relieve auxiliary hydraulic pressure, and disconnect the auxiliary hydraulic quick couplers.
- Use very slow ground speeds when digging or moving materials. If the scoop engages a lodged rock or other object with the machine moving fast, a sudden deceleration could cause injury to the operator and/or damage to the equipment.
- To balance the power unit and to keep all wheels securely on the ground when using the slip scoop, adequate rear ballast or an appropriate implement mounted on the 3-point hitch is recommended. When using the slip scoop on the optional "3-n-1" 3-point hitch attachment in the rear, adequate front ballast or an appropriate implement mounted on the front hitch is recommended.

Daily Inspection

⚠ WARNING

Always set the parking brake, shut off power unit engine, remove the ignition key, and ensure all moving parts have come to a complete stop before inspecting components, or attempting any repair or adjustment.

1. Park machine on a level surface, with the engine shut off and all fluids cold.
2. Perform a visual inspection of both the power unit and the slip scoop. Look for loose or missing hardware, damaged components, or signs of wear.
3. Inspect hydraulic hoses, hydraulic fittings, and fuel lines to ensure tight, leak free connections.
4. Refer to the power unit operator's manual. Check the power unit's engine oil, hydraulic oil, cooling system, tire pressure, and fuel level. Add fluid or service as required.
5. Test the power unit's operator safety interlock system*.

Attaching

1. Drive the power unit slowly forward into the hitch arms of the slip scoop. Align the lift arms of the power unit with the slip scoop hitch arms by raising or lowering the front hitch and complete the engagement.
2. Once completely engaged, close the front hitch locking lever.*
3. Engage the parking brake* and shut off the engine.
4. Wipe hose ends clean, and connect to the power unit's hydraulic quick couplers. If equipped, connect the hoses and quick couplers so the red indicators are paired together and the yellow indicators are paired together.
5. Ballast the rear of the power unit to assure proper balance and stability with a loaded slip scoop. **4000 Series:** Make sure that 4) Ventrac weights are installed on the rear hitch weight bar (3 weights if unit is equipped with a 3-point hitch). **LT3000:** Install rear weight bracket kit (70.3009) and 2) weights (47.0115). **LE3100 & LE3200:** Install rear weight bracket kit (70.3017) and 2) weights (47.0115).

Detaching

1. Park the power unit on a level surface and set the parking brake.*
2. Lower the slip scoop to the ground.
3. Shut off power unit engine.
4. Disconnect the hydraulic quick couplers from the power unit and store the hose ends in the main frame holes (HE480 only) or looped over the bucket. Do not allow hose ends to lay in the dirt.
5. Open the front hitch locking lever*.
6. Restart the power unit and back slowly away from the slip scoop. A side to side movement of the steering wheel may aid disengagement.
7. **3000 Series only:** Remove the rear weights from the rear weight bracket.

Moving Loose or Soft Materials

If the power unit is equipped with 2-speed transaxles, shift into low range when working with the slip scoop.

Lower the front hitch and rotate the bucket to position the cutting edge at the desired level (usually near the ground). If scooping directly off the ground, you may want to start with the primary S.D.L.A. control lever* in the float position to allow the bucket to follow the surface contour. NOTE: In order for the scoop to float properly, weight transfer must be disengaged.

Drive forward slowly into the pile. Do not use high speed to "ram" a pile of material.

⚠ WARNING

Drive slowly when running the scoop into material.

Never drive at speeds that would cause injury to the operator or damage to the machine if the scoop would catch on a rock or other immovable object buried in the material.

Tilt the front of the bucket downward very slightly to keep the "heel" of the bucket from dragging the ground.

For scraping a hard surface, use a bit of down pressure on the cutting edge by taking the primary S.D.L.A. control lever* out of the float position and slightly lowering the scoop. NOTE: This will take some weight off the front axle reducing the power unit's steering ability.

⚠ WARNING

Do not lift the front tires off the ground when applying down pressure. Steering ability will be lost or greatly reduced.

Continue to fill by driving forward very slowly while beginning to raise the bucket. To complete the fill,

* Refer to power unit operator's manual for operation of power unit controls.

roll back and lift the bucket.

If the bucket “stalls” while attempting to take a deep bite of material, stop the forward motion or slightly reverse the power unit to reduce the penetration force on the bucket and then take a smaller bite.

The power unit’s weight transfer system can be engaged to increase lift and digging capacity when required. NOTE: The float capability of the front hitch will not work in this mode.

While hauling the loaded material to another location, use speeds that are safe for the terrain and surface conditions. NOTE: Counterweight is added primarily to offset the added weight of material lifted and carried by the slip scoop. When the load is dumped, the power unit center of gravity is altered. For example, no load means the front end will be lighter. The operator should always compensate for this variable.

Smoothing and Leveling Loose Materials

For smoothing or leveling while moving forward, tilt the front of the bucket down 0-15 degrees.

For smoothing or leveling while moving in reverse, tilt the bucket down 30-45 degrees. Usually the best smoothing results are obtained when pulling a relatively small amount of material in reverse.

⚠ WARNING

Always set the parking brake, shut off power unit engine, remove the ignition key, and ensure all moving parts have come to a complete stop before inspecting components or attempting any repair or adjustment.

⚠ Attention

If any component requires replacement, use only original Ventrac replacement parts.

Cleaning and General Maintenance

For best results, and to maintain the finish of the HE300 or HE480 slip scoop, clean or wash the slip scoop after each use to remove dirt, mud, stones, and other debris.

Lubrication Locations

Lubrication is required at the following locations. Refer to the maintenance schedule for service intervals and amount of grease.

Cylinder Ends (Right & Left Cylinders)

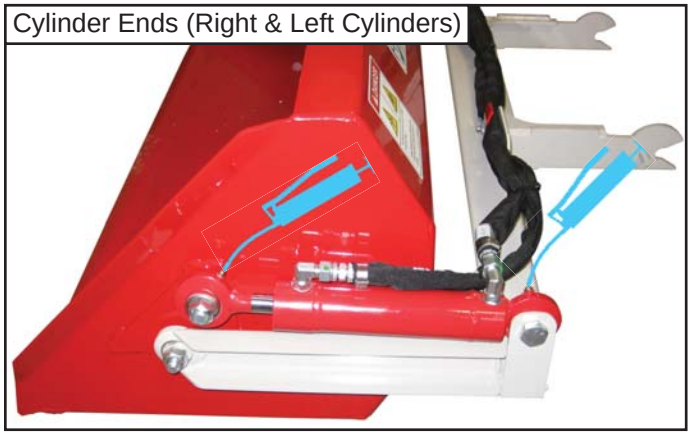

Storage

Preparing the Slip Scoop for Storage

1. Clean the slip scoop.
2. Inspect for loose or missing hardware, damaged components, or signs of wear.
3. Inspect safety decals. Replace any decals that are faded, illegible, or missing.
4. Inspect hydraulic hoses and fittings to ensure tight, leak free connections. Repair or replace any damaged or worn components.
5. Apply grease to all grease points. Wipe off all excess grease.

Removing the Slip Scoop from Storage

Inspect, clean, and prepare the slip scoop for use.

Maintenance Schedule

HE300 / HE480

Maintenance Schedule	# of Locations	# of Pumps	AS NEEDED	Daily	At 50 Hours	At 100 Hours	At 150 Hours	At 200 Hours	At 250 Hours	At 300 Hours	At 350 Hours	At 400 Hours	At 450 Hours	At 500 Hours	At 550 Hours	At 600 Hours	At 650 Hours	At 700 Hours	At 750 Hours	At 800 Hours	At 850 Hours	At 900 Hours	At 950 Hours	At 1000 Hours	Yearly
Grease & Lubrication: See Lubrication Section																									
Cylinder End	4	^	**		✓	✓	✓	✓	✓	✓	✓	✓	✓	✓	✓	✓	✓	✓	✓	✓	✓	✓	✓	✓	
Inspection																									
Inspect for Loose, Missing, or Worn Components.				✓																					
Inspect Hydraulic Hoses and Fittings				✓																					
Inspect Safety Decals				✓																					

** Operation in severe conditions may require more frequent service intervals.

^ Grease Until Fresh Grease is visible

Maintenance Checklist

HE300 / HE480

Maintenance Checklist	# of Locations	# of Pumps	AS NEEDED	Daily	At 50 Hours	At 100 Hours	At 150 Hours	At 200 Hours	At 250 Hours	At 300 Hours	At 350 Hours	At 400 Hours	At 450 Hours	At 500 Hours	At 550 Hours	At 600 Hours	At 650 Hours	At 700 Hours	At 750 Hours	At 800 Hours	At 850 Hours	At 900 Hours	At 950 Hours	At 1000 Hours	Yearly
Grease & Lubrication: See Lubrication Section																									
Cylinder End	4	^																							
Inspection																									
Inspect for Loose, Missing, or Worn Components.																									
Inspect Hydraulic Hoses and Fittings																									
Inspect Safety Decals																									

** Operation in severe conditions may require more frequent service intervals.

^ Grease Until Fresh Grease is visible

HE300 Dimensions

Overall Height	15 inches (38 cm)
Overall Length	34 inches (86.5 cm)
Overall Width	34-1/2 inches (87.5 cm)
Working Width	30 inches (76 cm)
Weight	130 pounds (59 kg)
Capacity	3.6 ft^3 (.10 m^3)
Dump Angle At Full Height	50 degrees*
Ground Clearance in Raised Position	11 inches (28 cm)*
Ground Clearance in Dumped Position	9 inches (23 cm)*

HE480 Dimensions

Overall Height	15 inches (38 cm)
Overall Length	34 inches (86.5 cm)
Overall Width	53 inches (134.5 cm)
Working Width	48 inches (122 cm)
Weight	175 pounds (79.5 kg)
Capacity	6 ft^3 (.17 m^3)
Dump Angle At Full Height	50 degrees*
Ground Clearance in Raised Position	11 inches (28 cm)*
Ground Clearance in Dumped Position	9 inches (23 cm)*

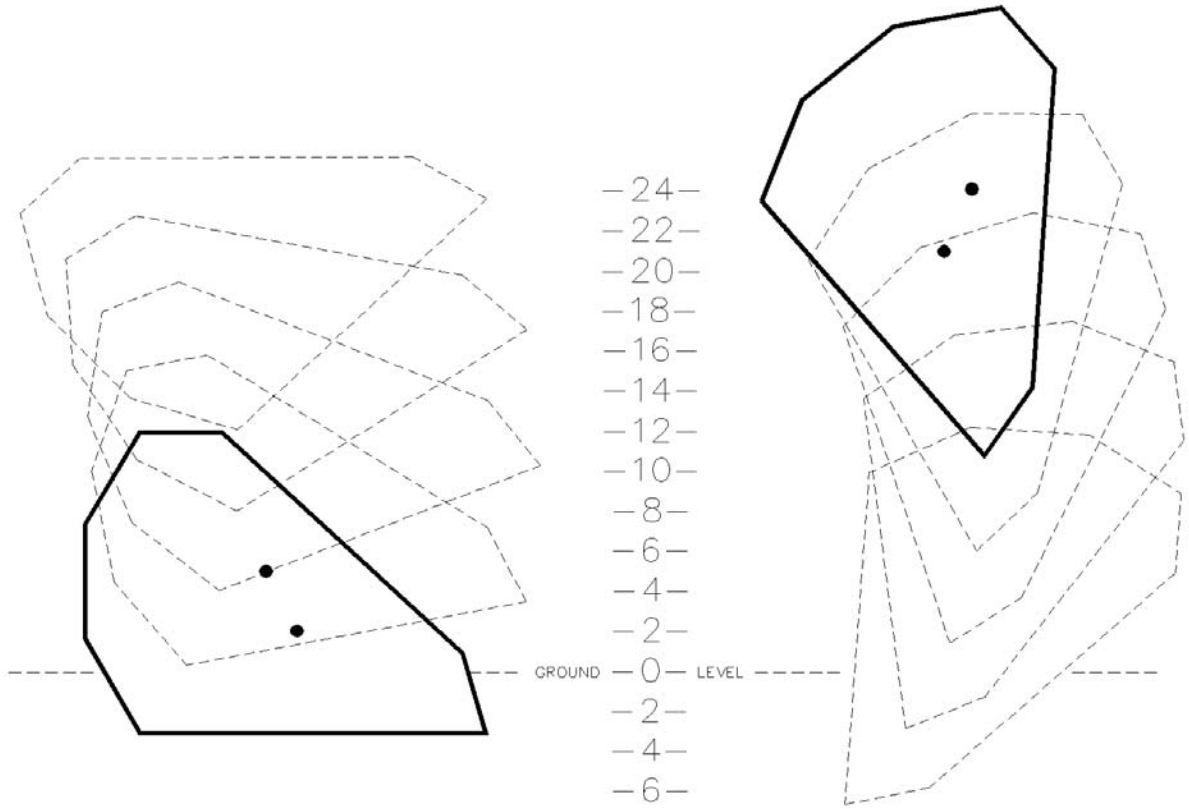

*Mounted on Ventrac 4000 series tractor with standard tires. Actual measurements may vary.

ILLUSTRATED DRAWING
HE300 Slip Scoop

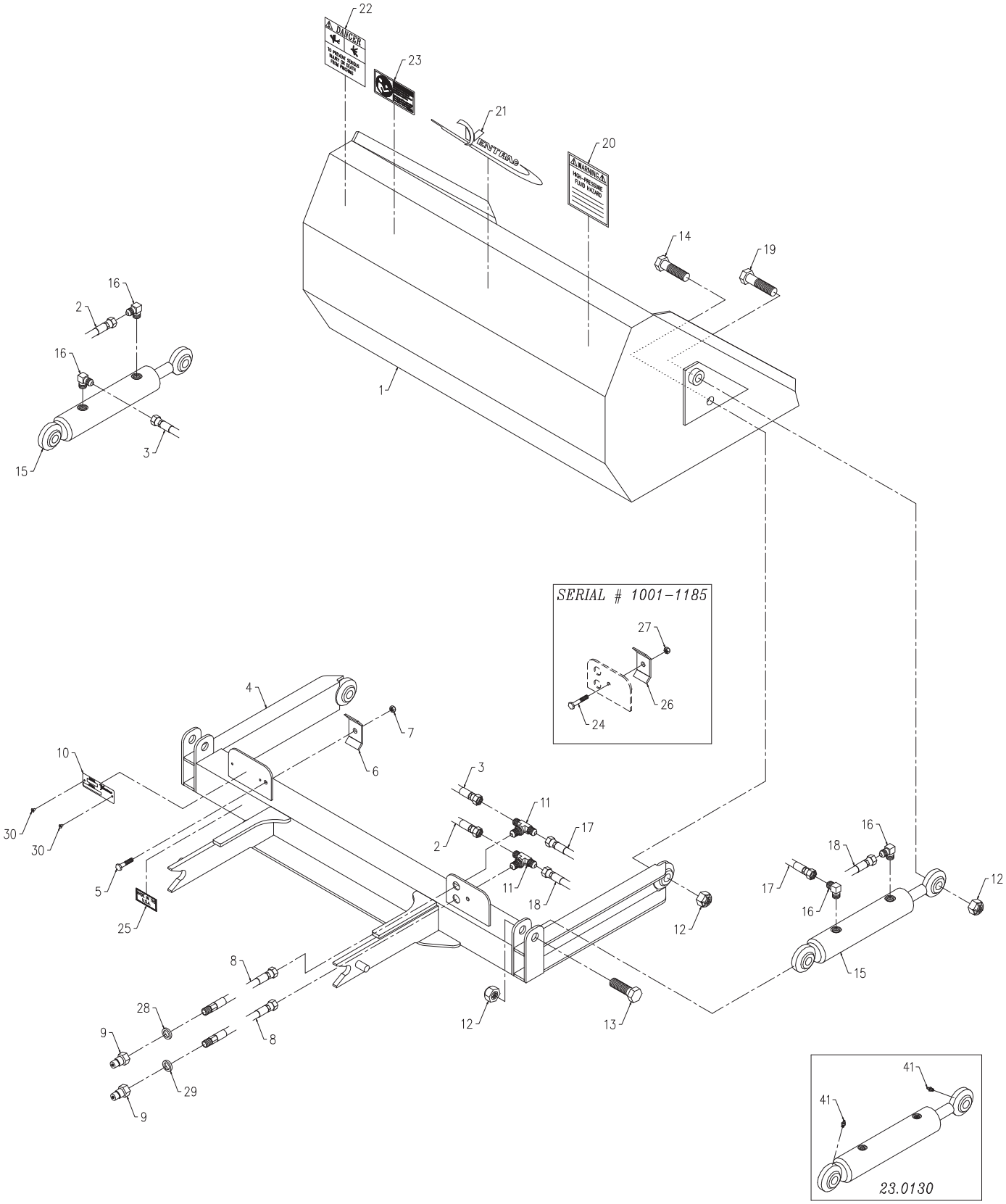

Use only original Ventrac replacement parts.

HE300 Slip Scoop

REF.	PART NO.	DESCRIPTION	QTY.
1	62.0807	FRAME, SCOOP BODY WELDMENT 30”	1
2	20.0148	HOSE, 1/4X33.50 SAE 100R17 AR	1
3	20.0258	HOSE, 1/4X27.50 SAE 100R17AR	1
4	62.0808	FRAME, SCOOP HITCH WELDMENT	1
5	90.0410	BOLT, 1/4-20 USS X 1 1/4	1
6	64.0673	CLAMP, HYDRAULIC HOSE	1
7	99.A04	LOCKNUT, STOVER 1/4-20 USS	1
8	20.0166	HOSE, 1/4X35.00 SAE 100R17 AR	2
9	23.0104	COUPLER, QUICK MALE 1/4	2
10	not available	PLATE, VENTRAC SERIAL NUMBER	1
11	25.2603-6-6-6	FITTING, M TEE 3/8 X 3/8 X 3/8 (Serial # 1001-1185)	2
11	25.2703-6-6-6LN	FITTING, BULKHEAD T 3/8 W/LNUT (Serial # 1186-)	2
12	99.A10	LOCKNUT, STOVER 5/8-11 USS	6
13	90.1016	BOLT, 5/8-11 USS X 2	2
14	90.1018	BOLT, 5/8-11 USS X 2 1/4	2
15	23.0100	CYLINDER, 1 1/2 X 5, 1/4 NPT (Serial # 1001-1119)	2
15	23.0130	CYLINDER, 1-1/2” X 5” (Serial # 1120-)	2
16	25.2501-06-04	FITTING, 90 ME 3/8 X 1/4 (Serial # 1001-1119)	4
16	25.6801-06-06	FITTING, 90 ME 3/8 X 3/8 (Serial # 1120-)	4
17	20.0149	HOSE, 1/4X17.50 SAE 100R17 AR	1
18	20.0150	HOSE, 1/4X11.50 SAE 100R17 AR	1
19	90.1020	BOLT, 5/8-11 USS X 2 1/2	2
20	00.0103	DECAL, HAZARD-HIGH PRESS.FLUID	1
21	00.0189	DECAL, VENTRAC ORBITAL	1
22	00.0102	DECAL, DANGER-PINCHING HAZARD	1
23	00.0217	DECAL, WARNING READ OWNERS MAN	1
24	90.0412	BOLT, 1/4-20 USS X 1 1/2 (Serial # 1001-1185)	1
25	00.0100	DECAL, MADE IN USA	1
26	64.0673	CLAMP, HYDRAULIC HOSE (Serial # 1001-1185)	1
27	99.A04	LOCKNUT, STOVER 1/4-20 USS (Serial # 1001-1185)	1
28	05.0117	WASHER, .544ID X .817 X.14 YEL	1
29	05.0116	WASHER, .544ID X .817 X.14 RED	1
30	04.0007	RIVET, POP DOME 1/8 X 1/8 S.S.	2
41	29.GF0001	GREASE FTG, 1/4 SAE ST	2

Use only original Ventrac replacement parts.

ILLUSTRATED DRAWING
HE480 Slip Scoop

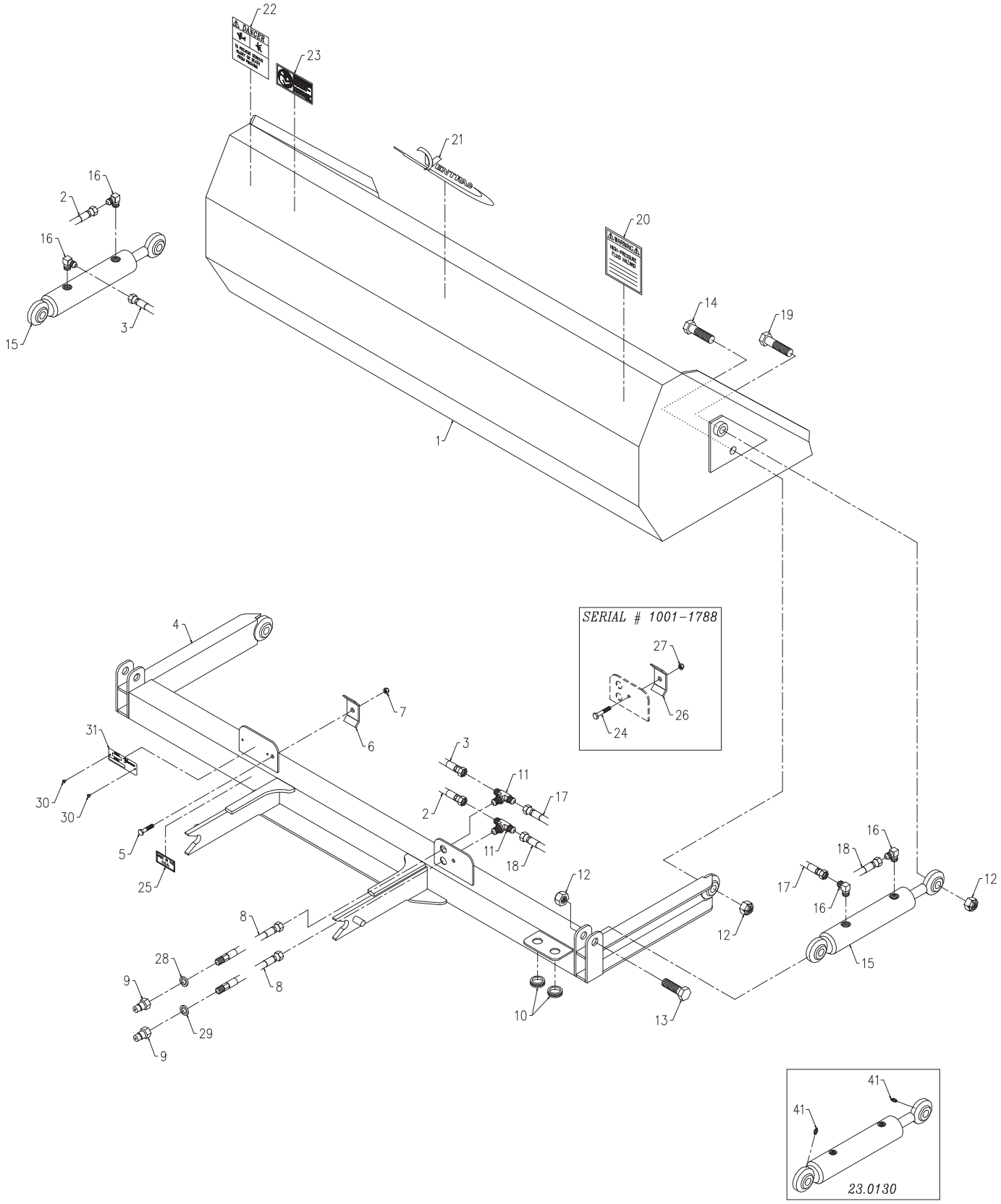

Use only original Ventrac replacement parts.

HE480 Slip Scoop

REF.	PART NO.	DESCRIPTION	QTY.
1	62.0761	FRAME, SCOOP WELDMENT 48”	1
2	20.0122	HOSE, 1/4X43.00 SAE 100R17AR	1
3	20.0121	HOSE, 1/4X36.50 SAE 100R17AR	1
4	62.0762	FRAME, HITCH WELDMENT 48”	1
5	90.0410	BOLT, 1/4-20 USS X 1 1/4	1
6	64.0673	CLAMP, HYDRAULIC HOSE	1
7	99.A04	LOCKNUT, STOVER 1/4-20 USS	1
8	20.0166	HOSE, 1/4X35.00 SAE 100R17 AR	2
9	23.0104	COUPLER, QUICK MALE 1/4	2
10	05.0045	GROMMET, 3/4ID,1 3/8OD,1/2THK (Serial # 1001-1788)	2
11	25.2603-6-6-6	FITTING, M TEE 3/8 X 3/8 X 3/8 (Serial # 1001-1788)	2
11	25.2703-6-6-6LN	FITTING, BULKHEAD T 3/8 W/LNUT (Serial # 1789-)	2
12	99.A10	LOCKNUT, STOVER 5/8-11 USS	6
13	90.1016	BOLT, 5/8-11 USS X 2	2
14	90.1018	BOLT, 5/8-11 USS X 2 1/4	2
15	23.0100	CYLINDER, 1 1/2 X 5, 1/4 NPT (Serial # 1001-1274)	2
15	23.0130	CYLINDER, 1-1/2” X 5” (Serial # 1275-)	2
16	25.2501-06-04	FITTING, 90 ME 3/8 X 1/4 (Serial # 1001-1274)	4
16	25.6801-06-06	FITTING, 90 ME 3/8 X 3/8 (Serial # 1275-)	4
17	20.0124	HOSE, 1/4X13.50 SAE 100R17AR	1
18	20.0123	HOSE, 1/4X19.50 SAE 100R17AR	1
19	90.1020	BOLT, 5/8-11 USS X 2 1/2	2
20	00.0103	DECAL, HAZARD-HIGH PRESS.FLUID	1
21	00.0189	DECAL, VENTRAC ORBITAL	1
22	00.0102	DECAL, DANGER-PINCHING HAZARD	1
23	00.0217	DECAL, WARNING READ OWNERS MAN	1
24	90.0412	BOLT, 1/4-20 USS X 1 1/2 (Serial # 1001-1788)	1
25	00.0100	DECAL, MADE IN USA	1
26	64.0673	CLAMP, HYDRAULIC HOSE (Serial # 1001-1788)	1
27	99.A04	LOCKNUT, STOVER 1/4-20 USS (Serial # 1001-1788)	1
28	05.0117	WASHER, .544ID X .817 X.14 YEL	1
29	05.0116	WASHER, .544ID X .817 X.14 RED	1
30	04.0007	RIVET, POP DOME 1/8 X 1/8 S.S.	2
31	not available	PLATE, VENTRAC SERIAL NUMBER	1
41	29.GF0001	GREASE FTG, 1/4 SAE ST	2

Use only original Ventrac replacement parts.

WARRANTY

LIMITED WARRANTY - VENTRAC TURF EQUIPMENT

Venture Products, Inc. (shall be referred to as V.P.I.) warrants on the terms and conditions herein, that it will repair, replace, or adjust any part manufactured by Venture Products Inc. and found by Venture Products Inc. to be defective in material and / or workmanship.

Effective September 1st 2005, Ventrac warranty on power units & attachments (excluding the HG100/HG150 generator) for **residential use only** is limited to **three (3) years** from original purchase date. Ventrac power units & attachments used **commercially or for any income-producing purpose** is limited to **two (2) years** from original purchase date. Ventrac ET200 turbine blower (turbine only) is limited to **two (2) years** from original purchase date. Ventrac HG100/HG150 generator is limited to **one (1) year** from original purchase date. Ventrac power units & attachments used for **rental** is limited to **180 days** from original purchase date. (**NOTE:** All accessories such as: 3-point hitch, foot pedal, dual wheel kit, etc. will be covered under the above warranty periods as they would apply provided they are installed by an authorized Ventrac dealer.) This warranty may be transferred and will carry the remainder of the warranty starting from the original purchase/registration date with the dealership and/or V.P.I. In the event that product/s originally registered as **(3) year residential use** are to be transferred to a commercial user, the warranty would change to the remainder of **(2) year commercial use** starting from the original purchase/registration date with the dealership and/or V.P.I.

If this warranty covers a consumer product as defined by the Magnusson-Moss warranty act, no warranties, express or implied, (including, but not limited to, the warranty of merchantability or fitness for a particular purpose) shall extend beyond the applicable time period stated in bold face type above.

If this warranty covers a product used commercially or for any income producing purpose, the foregoing warranties are in lieu of all other warranties and no representations, guarantees or warranties, express or implied, (including, but not limited to, a warranty of merchantability or fitness for a particular purpose), are made by V.P.I. in connection with the manufacture or sale of its products.

The engine warranty is covered by its respective engine manufacturer. Please refer to the engine manufacturer's warranty statement that is included in the owner's manual.

The Ventrac turf equipment, including any defective parts, must be returned to an authorized Ventrac dealer within the warranty period. The warranty shall extend to the cost to repair or replace (as determined by V.P.I.) the defective part. **The expense of pickup and delivery of equipment, service call drive time or any transportation expense incurred for warranty repair is the sole responsibility of the owner and is not covered under warranty by Ventrac and/or V.P.I.** V.P.I.'s responsibility in respect to claims is limited to making the required repairs or replacements, and no claim of breach of warranty shall be cause for cancellation or rescission of the contract of sale of any Ventrac equipment. Proof of purchase may be required by the dealer to substantiate any warranty claim. Only warranty work performed and submitted by an authorized Ventrac dealer may be eligible for warranty credit.

This warranty extends only to Ventrac turf equipment operated under normal conditions and properly serviced and maintained. The warranty expressly does **not** cover: (a) any defects, damage or deterioration due to normal use, wear and tear, or exposure; (b) normal maintenance services, such as cleaning, lubrication, oil change; (c) replacement of service items, such as oil, lubricants, spark plugs, belts, rubber hoses or other items subject to normal service replacement; (d) damage or defects arising out of, or relating to abuse, misuse, neglect, alteration, negligence or accident; (e) repair or replacement arising from operation of, or use of the turf equipment which is not in accordance with operating instructions as specified in the operator's manual or other operational instructions provided by V.P.I.; (f) repair or replacement arising as a result of any operation from Ventrac turf equipment that has been altered or modified so as to, in the determination of V.P.I., adversely affect the operation, performance or durability of the equipment

WARRANTY

LIMITED WARRANTY - VENTRAC TURF EQUIPMENT

or that has altered, modified or affected the turf equipment so as to change the intended use of the product; (g) repair or replacement necessitated by the use of parts, accessories or supplies, including gasoline, oil or lubricants, incompatible with the turf equipment or other than as recommended in the operator's manual or other operational instructions provided by V.P.I.; (h) repairs or replacements resulting from parts or accessories which have adversely affected the operation, performance or durability of the turf equipment; or (i) damage or defects due to or arising out of repair of Ventrac turf equipment by person or persons other than an authorized Ventrac service dealer or the installation of parts other than genuine Ventrac parts or Ventrac recommended parts.

The sole liability of V.P.I. with respect to this warranty shall be repair and replacement as set forth herein. V.P.I. shall have no liability for any other cost, loss, or damage. In particular V.P.I shall have no liability or responsibility for: (i) expenses relating to gasoline, oil, lubricants; (ii) loss, cost, or expense relating to transportation or delivery of turf equipment from the location of owner or location where used by owner to or from any authorized Ventrac dealer; (iii) travel time, overtime, after hours time or other extraordinary repair charges or charge relating to repairs or replacements outside of normal business hours at the place of business of an authorized Ventrac dealer; (iv) rental of like or similar replacement equipment during the period of any warranty repair or replacement work; (v) any telephone or telegram charges; (vi) loss or damage to person or property other than that covered by the terms of this warranty; (vii) any claims for lost revenue, lost profit or additional cost or expense incurred as a result of a claim of breach of warranty; or (viii) attorney's fees.

The remedies of buyer set forth herein are exclusive and are in lieu of all other remedies. The liability of V.P.I., whether in contract, tort, under any warranty, or otherwise, shall not extend beyond its obligation as set forth herein. V.P.I. shall not be liable for cost of removal or installation nor shall V.P.I. be responsible for any direct, indirect, special or consequential damages of any nature. In no event shall V.P.I. be liable for any sum in excess of the price received for the goods for which liability is claimed.

There are no representations or warranties which have been authorized to the buyer of the turf equipment other than set forth in this warranty. Any and all statements or representations made by any seller of this equipment, including those set forth in any sales literature or made orally by any sales representative, are superseded by the terms of this warranty. Any affirmation of fact or promise made by V.P.I. or any of its representatives to the buyer which relates to the goods that are the subject to this warranty shall not be regarded as part of the basis of the bargain and shall not be deemed to create any express warranty that such goods shall conform to the affirmation or promise.

No employee, distributor, or representative is authorized to change the foregoing warranties in any way or grant any other warranty on behalf of V.P.I.

Some states do not allow limitations on how long an implied warranty lasts or allow the exclusion on limitation of incidental or consequential damages, so the above limitation or exclusion may not apply to you.

This warranty gives you specific legal rights, and you may also have other rights which vary from state to state.

This warranty applies to all Ventrac turf equipment sold in the United States and Canada.