Operator's Manual & Parts Drawings

Power Blower

Model KA160

by Venture Products Inc.

VENTRAC® MOUNT SYSTEM

Revised 07/31/14
09.10016 Rev. 03

328 East Water St.
PO Box 148
Orrville Oh 44667
www.ventrac.com

To the Owner
Contact Information and Product Identification

If you need to contact an authorized Ventrac dealer for information on servicing your product, always provide the product model and serial numbers.

Please fill in the following information for future reference. See the picture(s) below to find the location of the identification numbers. Record them in the spaces provided.

Date of Purchase: _____

Dealer: _____

Dealer Address: _____

_____

Dealer Phone Number: _____

Dealer Fax Number: _____

Model # (A): _____

Serial # (B): _____

Affix Part/Serial Number label here.

Venture Products Inc. reserves the right to make changes in design or specifications without obligation to make like changes on previously manufactured products.

TABLE OF CONTENTS

INTRODUCTION **PAGE 4**

Product Description....4
Why Do I Need an Operator's Manual?....4
Using Your Manual....5
Manual Glossary....5

SAFETY **PAGE 6**

Safety Decals....6
General Safety Procedures....7
Training Required....7
Personal Protective Equipment Requirements....7
Operation Safety....7
Preventing Accidents....8
Keep Riders Off....8
Operating On Slopes....9
Roadway Safety....9
Truck Or Trailer Transport....9
Maintenance....10
Fuel Safety....10
Hydraulic Safety....11
KA160 Safety Procedures....12

OPERATIONAL CONTROLS **PAGE 13**

Hydraulic Rotational Control....13
Blower Deflector....13
Weight Transfer....13

GENERAL OPERATION **PAGE 14**

Daily Inspection....14
Attaching....14
Detaching....14
Manual Blower Rotation....14
Hydraulic Blower Rotation....14
Blower Operation....14

SERVICE **PAGE 15**

Cleaning and General Maintenance....15
Lubrication....15
Belt Inspection....15
Gearbox Drive Belt Replacement....16
Fan Drive Belt Replacement....16
Blower Rotation Belt Replacement....16
Storage....16

SPECIFICATIONS **PAGE 17**

Dimensions....17
Features....17

PARTS **PAGE 18**

Main Frame....18
Fan Housing....20
Hydraulic Rotational Control....22

WARRANTY **PAGE 24**

INTRODUCTION

Venture Products Inc. is pleased to provide you with your new Ventrac KA160 power blower! We hope that Ventrac equipment will provide you with a ONE Tractor Solution.

Product Description

The KA160 power blower features a vertical shaft design that delivers powerful, yet quiet performance. It can be used to remove leaves, light snow, water, and other debris.

The blower housing can be rotated 180 degrees using the power unit's secondary SDLA control lever. This allows the operator to move debris in the desired direction without hindering operation. Maximum performance is produced throughout the 180 degree arc.

An adjustable deflector shield allows the operator to further control the blower discharge.

Two gauge wheels enable the power blower to follow the ground and maintain a consistent distance from the surface that is being cleared.

Why Do I Need an Operator's Manual?

This manual has been created to help you gain the important knowledge of what is needed to safely operate, maintain, and service your machine. It is divided into sections for convenient reference of the appropriate section.

You must read and understand the operator's manual for each piece of Ventrac equipment you own. Reading the operator's manual will help you become familiar with each specific piece of equipment. Understanding the operator's manual will help you, as well as others, avoid personal injury and/or damage to the equipment. Keep this manual with the machine at all times. The manual should remain with the machine even if it is sold. If this manual becomes damaged or unreadable, it should be replaced immediately. Contact your local Ventrac dealer for a replacement.

When using a Ventrac attachment, be sure to read and follow the safety and operating instructions of both the power unit and the attachment being used to ensure the safest operation possible.

The information in this manual provides the operator with the safest procedures to operate the machine while getting the maximum use out of the unit. Failure to follow the safety precautions listed in this manual may result in personal injury and/or damage to the equipment.

INTRODUCTION

Using Your Manual

Throughout this manual, you will encounter special messages and symbols that identify potential safety concerns to help you as well as others avoid personal injury or damage to the equipment.

SYMBOL DEFINITIONS

ATTENTION

This symbol identifies potential health and safety hazards. It marks safety precautions. Your safety and the safety of others is involved.

There are three signal words that describe the level of safety concern: Danger, Warning, and Caution. Safety should always be the #1 priority when working on or operating equipment. Accidents are more likely to occur when proper operating procedures are not followed or inexperienced operators are involved.

Note: Right-Hand and Left-Hand orientations may be referred to at different places throughout this manual. Right-Hand and Left-Hand is determined as if sitting on the power unit seat facing forward.

SIGNAL WORD DEFINITIONS

⚠ DANGER

Indicates an imminently hazardous situation which, if not avoided, will result in death or serious injury. This signal word is limited to the most extreme cases.

⚠ WARNING

Indicates a potentially hazardous situation which, if not avoided, could result in death or serious injury.

⚠ CAUTION

Indicates a potentially hazardous situation which, if not avoided, may result in minor or moderate injury and/or property damage. It may also be used to alert against unsafe practices.

Manual Glossary

Power Unit A Ventrac tractor or other Ventrac engine powered device that may be operated by itself or with an attachment or accessory.

Attachment A piece of Ventrac equipment that requires a Power Unit for operation.

Accessory A device that attaches to a Power Unit or Attachment to extend its capabilities.

Machine Describes any “Attachment” or “Accessory” that is used in conjunction with a power unit.

Safety Decals

The following safety decals must be maintained on your KA160 power blower.

Keep all safety decals legible. Remove all grease, dirt, and debris from safety decals and instructional labels. If any decals are faded, illegible, or missing, contact your dealer promptly for replacements.

When new components are installed, be sure that current safety decals are affixed to the replacement components.

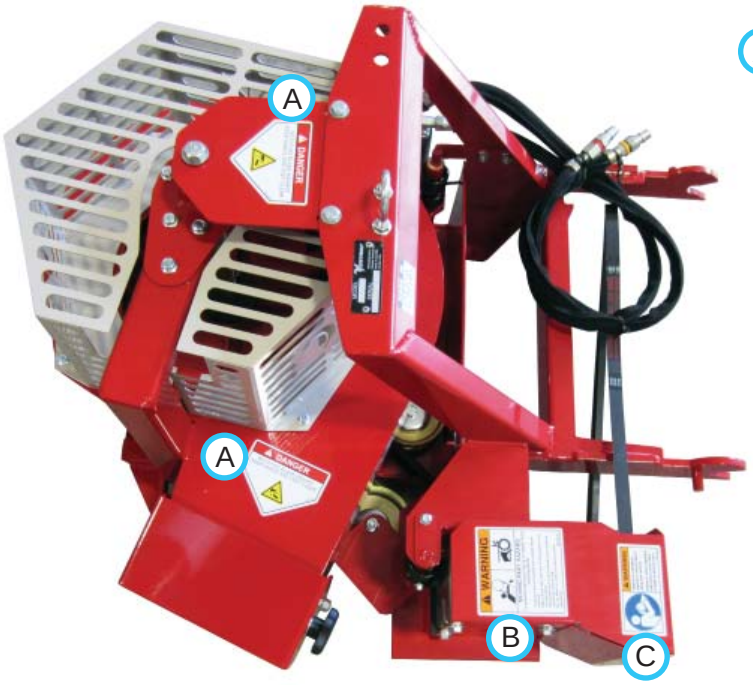

A

B

C

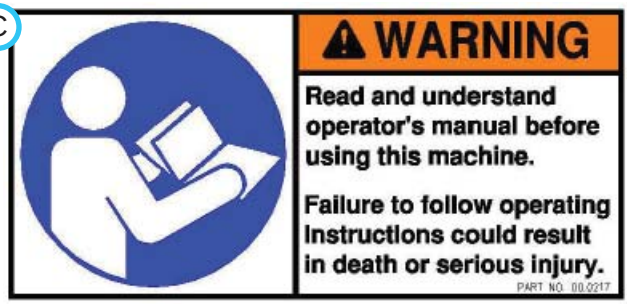

Decal	Description	Part Number	Quantity
A	Danger, Keep Hands & Feet Clear	00.0123	2
B	Warning, Moving Part Hazard	00.0101	1
C	Warning, Read Owner’s Manual	00.0217	1

General Safety Procedures for Ventrac Power Units, Attachments, & Accessories

Training Required

- The owner of this machine is solely responsible for properly training the operators.
- The owner/operator is solely responsible for the operation of this machine and prevention of accidents or injuries occurring to him/herself, other people, or property.
- Do not allow operation or service by children or untrained personnel. Local regulations may restrict the age of the operator.
- Before operating this machine, read the operator's manual and understand its contents.
- If the operator of the machine cannot understand this manual, then it is the responsibility of this machine's owner to fully explain the material within this manual to the operator.
- Learn and understand the use of all controls.
- Know how to stop the power unit and all attachments quickly in the event of an emergency.

Personal Protective Equipment Requirements

It is the responsibility of the owner to be sure that the operators use the proper personal protective equipment while operating the machine. Required personal protective equipment includes, but is not limited to, the following list.

- Wear a certified ear protection device to prevent loss of hearing.
- Prevent eye injury by wearing safety glasses while operating the machine.
- Closed toe shoes must be worn at all times.
- Long pants must be worn at all times.
- When operating in dusty conditions, it is recommended that a dust mask be worn.

Operation Safety

- Inspect machine before operation. Repair or replace any damaged, worn, or missing parts. Be sure guards and shields are in proper working condition and are secured in place. Make all necessary adjustments before operating machine.
- Some pictures in this manual may show shields or covers opened or removed in order to clearly illustrate any instructions. Under no circumstance should the machine be operated without these devices in place.
- Alterations or modifications to this machine can reduce safety and could cause damage to the machine. Do not alter safety devices or operate with shields or covers removed.
- Before each use, verify that all controls function properly and inspect all safety devices. Do not operate if controls or safety devices are not in proper working condition.
- Check parking brake function before operating. Repair or adjust parking brake if necessary.
- Observe and follow all safety decals.
- All controls are to be operated from the operator's seat only.
- Always wear a seat belt if the machine has a roll cage/bar installed and in upright position.
- Ensure the attachment or accessory is locked or fastened securely to the power unit before operating.
- Ensure that all bystanders are clear of the power unit and attachment before operating. Stop machine if someone enters your work area.
- Always be alert to what is happening around you, but do not lose focus on the task you are performing. Always look in the direction the machine is moving.
- Look behind and down before backing up to be sure of a clear path.
- If you hit an object, stop and inspect the machine. Make all necessary repairs before operating machine again.
- Stop operation immediately at any sign of equipment failure. An unusual noise can be a warning of equipment failure or a sign that maintenance is required. Make all necessary repairs before operating machine again.

General Safety Procedures for Ventrac Power Units, Attachments, & Accessories

Operation Safety (continued)

- If equipped with a high/low range feature, never shift between high and low range while on a slope. Always move the machine to level ground and engage the parking brake before shifting range.
- Do not leave machine unattended while it is running.
- Always park the machine on level ground.
- Always shut off engine when connecting attachment drive belt to the power unit.
- Never leave the operator's seat without lowering the attachment to the ground, setting the parking brake, shutting off the engine, and removing the ignition key. Make sure all moving parts have come to a complete stop before dismounting.
- Never leave equipment unattended without lowering the attachment to the ground, setting the parking brake, shutting off the engine, and removing the ignition key.
- Only operate in well-lit conditions.
- Do not operate when there is a risk of lightning.
- Never direct the discharge of any attachment in the direction of people, buildings, animals, vehicles, or other objects of value.
- Never discharge material against a wall or obstruction. Material may ricochet back towards the operator.
- Use extra caution when approaching blind corners, shrubs, trees, or other objects that may obscure vision.
- Do not run the engine in a building without adequate ventilation.
- Do not touch the engine or the muffler while the engine is running or immediately after stopping the engine. These areas may be hot enough to cause a burn.
- Do not change the engine governor settings or over-speed the engine. Operating engine at excessive speed may increase the hazard of personal injury.
- To reduce the hazard of fire, keep the battery compartment, engine, and muffler areas free of grass, leaves, and excessive grease.

Preventing Accidents

- Clear working area of objects that might be hit or thrown from machine.
- Keep people and pets out of mowing area.
- Know the work area well before operation. Do not operate where traction or stability is questionable.
- Reduce speed when you are operating over rough ground.
- Equipment can cause serious injury and/or death when improperly used. Before operating, know and understand the operation and safety of the power unit and the attachment being used.

- Do not operate machine if you are not in good physical and mental health, if you will be distracted by personal devices, or are under the influence of any substance which might impair decision, dexterity, or judgment.
- Children are attracted to machine activity. Be aware of children and do not allow them in the working area. Turn off the machine if a child enters the work area.

Keep Riders Off

- Only allow the operator on the power unit. Keep riders off.
- Never allow riders on any attachment or accessory.

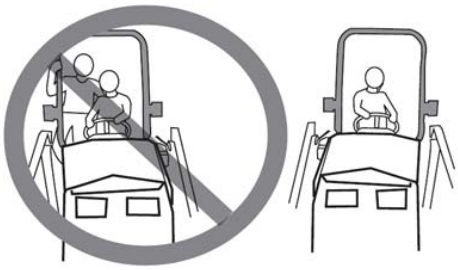

General Safety Procedures for Ventrac Power Units, Attachments, & Accessories

Operating On Slopes

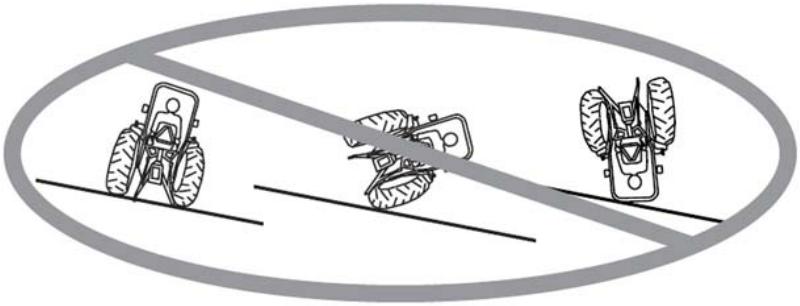

- Slopes can cause loss-of-control and tip-over accidents, which can result in severe injury or death. Be familiar with the emergency parking brake, along with the power unit controls and their functions.
- If power unit is equipped with a fold down roll bar, it must be locked in the upright position when operating on any slope.
- Use low range (if equipped) when operating on slopes greater than 15 degrees.
- Do not stop or start suddenly when operating on slopes.
- Never shift between high and low range while on a slope. Always move the power unit to level ground and place the selector lever in park before shifting range or placing the power unit in neutral.
- Variables such as wet surface and loose ground will reduce the degree of safety. Do not drive where machine could lose traction or tip over.
- Keep alert for hidden hazards in the terrain.
- Stay away from drop-offs, ditches, and embankments.
- Sharp turns should be avoided when operating on slopes.
- Pulling loads on hills decreases safety. It is the responsibility of the owner/operator to determine loads that can safely be controlled on slopes.
- Transport machine with attachment lowered or close to the ground to improve stability.
- While operating on slopes, drive in an up and down direction when possible. If turning is necessary while driving across slopes, reduce speed and turn slowly in the downhill direction.
- Assure a sufficient supply of fuel for continuous operation. A minimum of one-half tank of fuel is recommended.

Roadway Safety

- Operate with safety lights when operating on or near roadways.
- Obey all state and local laws concerning operation on roadways.
- Slow down and be careful of traffic when operating near or crossing roadways. Stop before crossing roads or sidewalks. Use care when approaching areas or objects that may obscure vision.
- If there is doubt of safety conditions, discontinue machine operation until a time when operation can be performed safely.
- When operating near or on roadways, have a Slow Moving Vehicle Emblem clearly displayed.

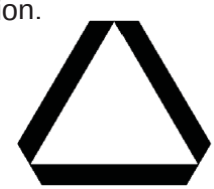

Truck Or Trailer Transport

- Use care when loading or unloading machine into a truck or trailer.
- The parking brake is not sufficient to lock the machine during transport. Always secure the power unit and/or attachment to the transporting vehicle.
- Shut off fuel supply to power unit during transport on truck or trailer.
- If equipped, turn the battery disconnect switch to the Off position to shut off electrical power.

General Safety Procedures for Ventrac Power Units, Attachments, & Accessories

Maintenance

- Keep all safety decals legible. Remove all grease dirt, and debris from safety decals and instructional labels.
- If any decals are faded, illegible, or missing, contact your dealer promptly for replacements.
- When new components are installed, be sure that current safety decals are affixed to the replacement components.
- If any component requires replacement, use only original Ventrac replacement parts.
- Always disconnect the negative battery cable from the battery when working with electrical components.
- Keep all bolts, nuts, screws, and other fasteners properly tightened.
- Always lower the attachment to the ground, engage parking brake, shut off engine, and remove the ignition key. Make sure all moving parts have come to a complete stop before cleaning, inspection, adjusting or repairing.
- If the power unit, attachment, or accessory requires repairs or adjustments not instructed in the operator's manual, the power unit, attachment, or accessory must be taken to an authorized Ventrac dealer for service.
- Never perform maintenance on the power unit and/or attachment if someone is sitting in the operator's seat.
- Always use protective glasses when handling the battery.
- Check all fuel lines for tightness and wear on a regular basis. Tighten or repair them as needed.
- To reduce the hazard of fire, keep the battery compartment, engine, and muffler areas free of grass, leaves, and excessive grease.
- Do not touch the engine, the muffler, or other exhaust components while the engine is running or immediately after stopping the engine. These areas may be hot enough to cause a burn.
- Do not change the engine governor settings or over-speed the engine. Operating engine at excessive speed may increase the hazard of personal injury.
- Springs may contain stored energy. Use caution when disengaging or removing springs and/or spring loaded components.
- An obstruction or blockage in a drive system or moving/rotating parts may cause a buildup of stored energy. When the obstruction or blockage is removed, the drive system or moving/rotating parts may move suddenly. Do not attempt to remove an obstruction or blockage with your hands. Keep hands, feet, and clothing away from all power-driven parts.
- Dispose of all fluids in accordance with local laws.

Fuel Safety

- Do not refuel machine while smoking or at a location near flames or sparks.
- Always refuel the machine outdoors.
- Do not store machine or fuel container indoors where fumes or fuel can reach an open flame, spark, or pilot light.
- Only store fuel in an approved container. Keep out of reach of children.
- Never remove fuel cap or add fuel with the engine running. Allow engine to cool before refueling.
- Replace all fuel tank and container caps securely.
- Do not overfill fuel tank.
- If fuel is spilled, do not attempt to start the engine. Move the power unit away from the fuel spill and avoid creating any source of ignition until fuel vapors have dissipated.
- If the fuel tank must be drained, it should be drained outdoors into an approved container.
- Dispose of all fluids in accordance with local laws.
- Check all fuel lines for tightness and wear on a regular basis. Tighten or repair them as needed.
- The fuel system is equipped with a shut-off valve. Shut off the fuel when transporting the machine to and from the job, when parking the machine indoors, or when servicing the fuel system.

General Safety Procedures for Ventrac Power Units, Attachments, & Accessories

Hydraulic Safety

- Make sure all hydraulic connections are tight and all hydraulic hoses and tubes are in good condition. Repair any leaks and replace any damaged or deteriorated hoses or tubes before starting the machine.
- Hydraulic leaks can occur under high pressure. Hydraulic leaks require special care and attention.
- Use a piece of cardboard and a magnifying glass to locate suspected hydraulic leaks.

- Keep body and hands away from pinhole leaks or nozzles that eject high pressure hydraulic fluid. Hydraulic fluid escaping under high pressure can penetrate the skin causing serious injury. If hydraulic fluid is injected into skin, seek immediate medical attention.

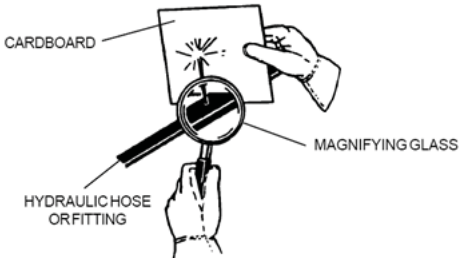

- Hydraulic system may contain stored energy. Before performing maintenance or repairs on the hydraulic system, remove attachments, engage parking brake, disengage weight transfer system (if equipped), shut off engine, and remove ignition key. To relieve pressure on the auxiliary hydraulic system, shut off the power unit engine and move the secondary S.D.L.A. lever left and right before disconnecting the auxiliary hydraulic quick couplers.
- Dispose of all fluids in accordance with local laws.

KA160 Safety Procedures

- Remove any loose objects from the work area. The power blower produces strong wind speeds and could blow loose objects at high velocity, causing damage or injury to other objects, buildings, vehicles, people, or animals.
- Never direct the blower discharge in the direction of people, buildings, animals, vehicles, or other objects of value.
- Do not attempt to clear leaves or other debris from the intake shield or the blower discharge while the machine is running. Always lower the attachment to the ground, engage parking brake, shut off engine, and remove the ignition key. Make sure all moving parts have come to a complete stop attempting to clear a blockage.
- Attachment hydraulic system may contain stored energy. Before performing maintenance or repairs on the hydraulic system, the attachment's auxiliary hydraulic hoses must be disconnected from the power unit. Lower the attachment to the ground, shut off power unit engine, move the secondary S.D.L.A. lever left and right to relieve auxiliary hydraulic pressure, and disconnect the auxiliary hydraulic quick couplers.

Hydraulic Rotational Control

The KA160 power blower (Serial # 1097 -) is equipped with hydraulic rotational control of the blower discharge. The discharge direction is controlled using the secondary SDLA control lever* of the power unit.

The KA160 power blower (Serial # 1001-1096) is equipped with a manual rotation lock lever.

Blower Deflector

The blower discharge can be further controlled with the blower deflector (A). The blower deflector can be set to deflect the discharge slightly downward to contact the ground closer to the power blower. The blower deflector can also be set to direct the airflow down at a steeper angle to remove leaves and debris from ditches. To set the blower deflector angle, loosen the knob (B) on the side of the deflector. Move the deflector to the desired angle and tighten the knob.

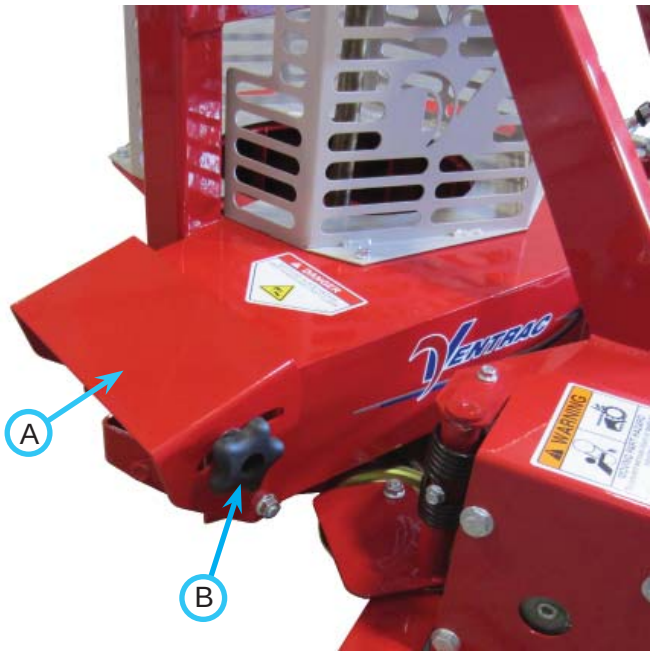

Weight Transfer

If using a power unit equipped with adjustable weight transfer, find a setting that allows the power blower to properly follow the ground contours without the gauge wheels gouging into soft ground.

* Refer to power unit operator's manual for operation of power unit controls.

Daily Inspection

⚠ WARNING

Always set the parking brake, shut off power unit engine, remove the ignition key, and ensure all moving parts have come to a complete stop before inspecting components, or attempting any repair or adjustment.

1. Park machine on a level surface, with the engine shut off and all fluids cold.
2. Perform a visual inspection of both the power unit and the power blower. Look for loose or missing hardware, damaged components, or signs of wear.
3. Inspect hydraulic hoses, hydraulic fittings, and fuel lines to ensure tight, leak free connections.
4. Inspect the power blower belts. Belts should be in good condition. Service as required.
5. Refer to the power unit operator's manual. Check the power unit's engine oil, hydraulic oil, cooling system, tire pressure, and fuel level. Add fluid or service as required.
6. Test the power unit's operator safety interlock system*.

Attaching

1. Drive the power unit slowly forward into the hitch arms of the power blower. Align the lift arms of the power unit with the power blower hitch arms by raising or lowering the front hitch and complete the engagement.
2. Once completely engaged, close the front hitch locking lever.*
3. Engage the parking brake* and shut off the engine.
4. Place the attachment belt onto the PTO drive pulley on the power unit. Ensure the belt is properly seated in each pulley.
5. Engage the PTO tension spring.
6. Wipe hose ends clean, and connect to the power unit's hydraulic quick couplers. If equipped, connect the hoses and quick couplers so the red indicators are paired together and the yellow indicators are paired together.

Detaching

1. Park the power unit on a level surface and set the parking brake.*
2. Lower the power blower to the ground.
3. Shut off power unit engine.
4. Disengage the PTO tension spring.
5. Remove the attachment belt from the PTO drive pulley of the power unit.
6. Disconnect the hydraulic quick couplers from the power unit and store the hose ends in the top frame holes on the power blower.
7. Disengage the front hitch locking lever*.
8. Restart the power unit and back slowly away from the power blower.

Manual Blower Rotation

If the power blower is equipped with a manual rotation lock lever, stop the power unit, engage the park brake, and disengage the PTO. Pull out on the handle of the spring loaded lock lever, while turning the blower housing to the desired direction. Release the lever to lock the blower housing in position.

Hydraulic Blower Rotation

If the power blower is equipped with hydraulic blower rotation, rotate the direction of the blower by moving the power unit's secondary SDLA lever* to the left or right. Release the lever when the desired direction has been achieved. If the rotation action seems backwards, reverse the quick coupler connections.

Blower Operation

Lower the power blower to the ground and place the power unit's primary SDLA lever* in the float position.

⚠ CAUTION

Always use float if the gauge wheels contact the ground. The power blower gauge wheels are not designed to carry power unit weight.

The power blower can also be operated while lifted off the ground.

Set the discharge of the power blower to the desired direction.

With the power unit's engine running between 2,000 and 2,500 RPM, engage the PTO switch. Increase the engine speed until there is sufficient force to accomplish the blowing task. Full engine speed will produce approximately 180 mph (290 km/h) wind at the blower outlet.

⚠ WARNING

The power blower produces strong wind speeds that can cause damage and/or unintentionally displace things. Never direct the blower discharge in the direction of people, buildings, animals, vehicles, or other objects of value.

* Refer to power unit operator's manual for operation of power unit controls.

⚠ WARNING

Always set the parking brake, shut off power unit engine, remove the ignition key, and ensure all moving parts have come to a complete stop before inspecting components or attempting any repair or adjustment.

⚠ Attention

If any component requires replacement, use only original Ventrac replacement parts.

Cleaning and General Maintenance

For best results, and to maintain the finish of the power blower, clean or wash the power blower after each use to remove leaves, dirt, and other debris.

Lubrication

Grease the upper and lower fan shaft bearings after every 50 hours of operation or once per season. Usually 1-2 pumps of grease is sufficient. If the lower fan shaft bearing is subjected to water or other harsh environments, it should be greased promptly and/or more frequently.

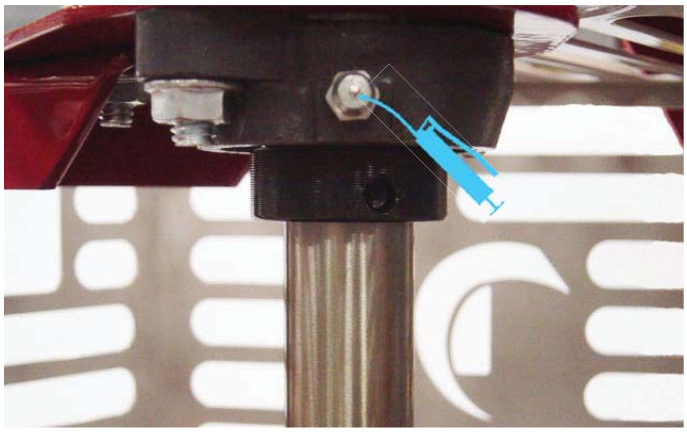

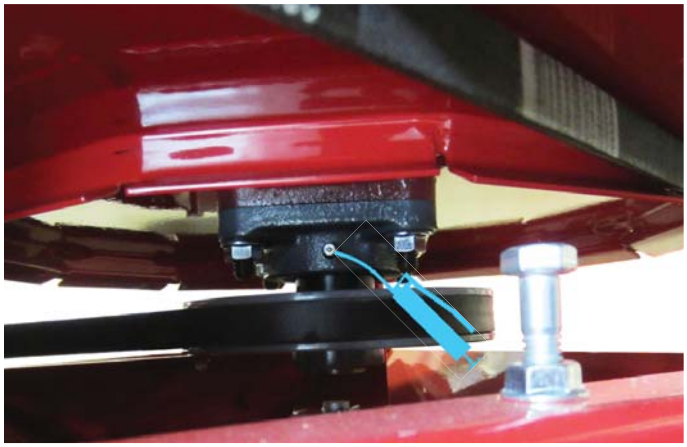

Remove the gauge wheels and grease the axle shafts as needed.

Remove the plug (A) from the gearbox to check the oil level. The oil level should be to the bottom of the fill hole. If necessary, add EP 80-90 weight gear lube to bring the oil to the proper level.

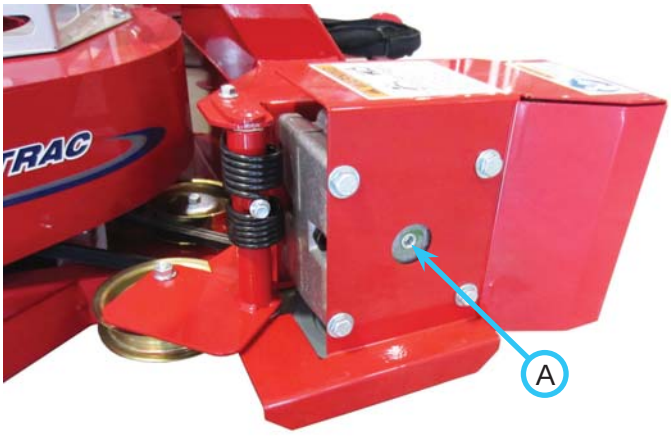

Belt Inspection

Inspecting the drive belts of the power blower can prevent sudden belt failure by finding problems before they cause a belt to break.

Typical wear on a drive belt may result in the conditions shown in the diagram. If any of these conditions occur, the drive belt will require replacement.

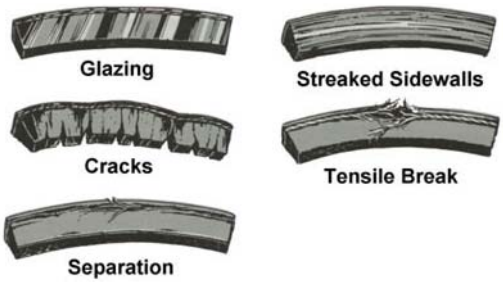

Gearbox Drive Belt Replacement

1. Detach the power blower from the power unit.
2. Remove the belt shield from the gearbox.
3. Remove the old drive belt.
4. Install the new drive belt over the pulley and reinstall the belt shield onto the gearbox.

Fan Drive Belt Replacement

1. Detach the power blower from the power unit.
2. Remove the belt shield from the gearbox.

⚠ CAUTION

Spring may be under high tension. Use caution when releasing spring, as pinching may occur.

3. Release the fan drive belt tensioning spring (A).

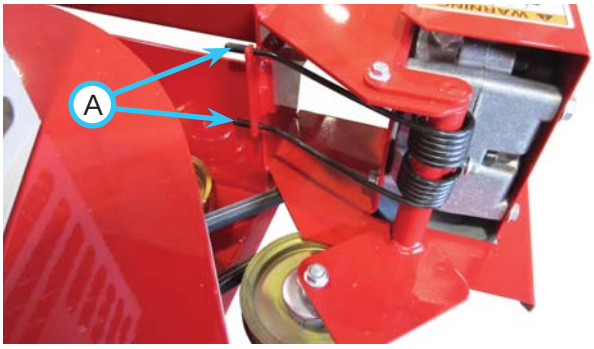

4. Remove the old fan drive belt.
5. Install the new fan drive belt over the pulleys and engage the fan drive belt tensioning spring.
6. Reinstall the belt shield onto the gearbox.

Blower Rotation Belt Replacement

1. Detach the power blower from the power unit.

⚠ CAUTION

Spring may be under high tension. Use caution when releasing spring, as pinching may occur.

2. Release the fan drive belt tensioning spring and remove the fan drive belt from the fan pulley.
3. Release the rotation belt tensioning spring (A).

4. Remove the old rotation belt.
5. Install the new rotation belt and engage the rotation belt tensioning spring.
6. Reinstall the fan drive belt and engage the fan drive belt tensioning spring.

Storage

Preparing the Power Blower for Storage

1. Clean the power blower.
2. Inspect for loose or missing hardware, damaged components, or signs of wear.
3. Inspect safety decals, Replace any safety decals that are faded, illegible, or missing.
4. Inspect hydraulic hoses and fittings to ensure tight, leak free connections. Repair or replace any damaged or worn components.
5. Inspect belts for signs of damage or wear and replace as required.
6. Service all lubrication points and inspect gearbox oil level.
7. Wipe off all excess grease or oil.

Preparing the Power Blower for Storage

Inspect, clean, and prepare power blower for use.

SPECIFICATIONS

Dimensions

Overall Height	20 inches (51 cm)
Overall Length	36 inches (91 cm)
Overall Width	23-1/2 inches (60 cm)
Weight	170 pounds (77 kg)
Fan Diameter	14 inches (35.5 cm)
Fan Width	4 inches (10 cm)
Discharge Opening	4-1/2 x 7-1/2 inches (11.5 x 19 cm)

Features

Blower Design	Vertical Shaft
Blower Rotation	180 degrees
Blower Rotational Control	Hydraulic Motor*
Fan	16 Blade, Welded
Gauge Wheels	3 inches (7.5 cm) OD x 3-1/2 inches (9 cm) long
Wind Speed	180 mph (290 km/h) at discharge opening

* Power blowers with serial numbers 1001-1096 were equipped with a manual rotation lock lever and the hydraulic motor was an optional accessory.

ILLUSTRATED DRAWING

Main Frame

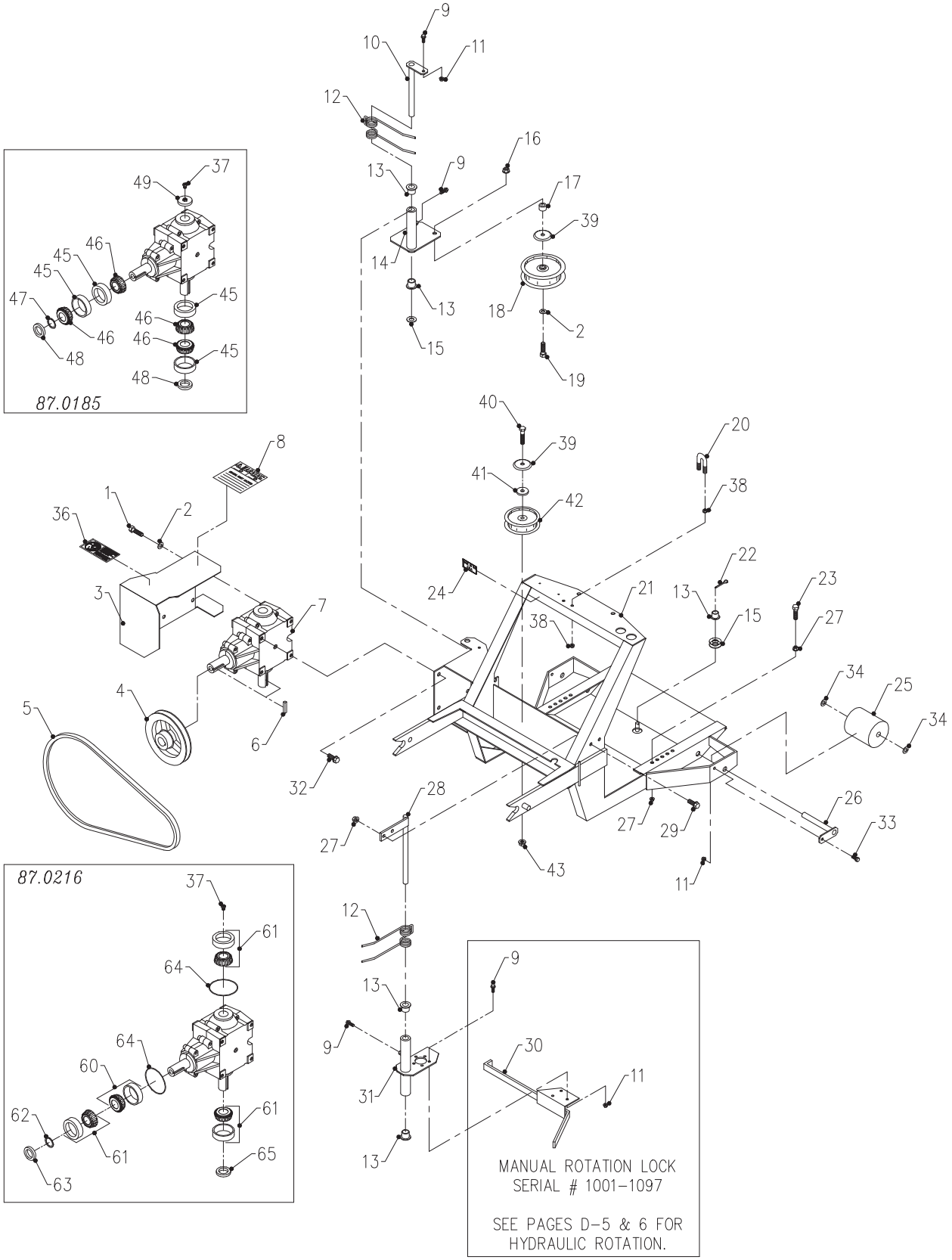

Use only original Ventrac replacement parts.

PARTS

Main Frame

REF.	PART NO.	DESCRIPTION	QTY.
1	90.0606	BOLT, 3/8-16 USS X 3/4	4
2	95.06	WASHER, FLAT 3/8 SAE	5
3	60.0769	SHIELD, BELT KA160	1
4	83.BK6016	PULLEY, 6” 1”BORE	2
5	81.B052	BELT, B52	1
6	85.K0408	KEY, 1/4 X 1	2
7	87.0185	GEARBOX, 1” SHAFT 1:1 CW/CCW (SERIAL # 1001-1359)	1
7	87.0216	GEARBOX, 1” SHAFT 1:1R CW/CCW (SERIAL # 1360-1519)	1
7	87.0185	GEARBOX, 1” SHAFT 1:1 CW/CCW (SERIAL # 1520-)	1
8	00.0101	DECAL, HAZARD-MOVING PART	1
9	99.SF0404	BOLT, SF 1/4-20 X 1/2	6
10	40.0278	SHAFT, PIVOT, BELT IDLER KA160	1
11	99.SF04	NUT, SF 1/4-20 USS	6
12	41.0065	SPRING, DOUBLE TORSION BLACK	2
13	85.B0027	BUSHING, 1/2 ID X 5/8 OD X 5/8	5
14	40.0279	IDLER ARM, BELT KA160	1
15	94.08	WASHER, FLAT 1/2 USS	3
16	99.SF06	NUT, SF 3/8-16 USS	1
17	64.0892	SPACER, IDLER PULLEY KA160	1
18	83.0037	PULLEY, IDLER FLAT 4” X 3/8	1
19	90.0616	BOLT, 3/8-16 USS X 2	1
20	11.0040	U-BOLT, 1/4-20 1-1/8” ID (SERIAL # 1001-1525)	1
20	11.0064	U-BOLT, 3/8-16 PIPE SIZE 3/4” (SERIAL # 1526-)	1
21	62.0869	FRAME, MAIN KA160	1
22	02.CP0408	COTTER PIN, 1/8 X 1	1
23	90.0512	BOLT, 5/16-18 USS X 1 1/2	2
24	00.0100	DECAL, MADE IN USA	1
25	50.0047	ROLLER, FRONT 3” DIA X 3 1/2”	2
26	40.0301	SHAFT, ROLLER KA/LA	2
27	99.SF05	NUT, SF 5/16-18 USS	6
28	64.0869	ANCHOR SHAFT, ROTATOR MOTOR	1
29	99.SF0506	BOLT, SF 5/16-18 USS X 3/4	2
30	40.0283	LEVER, MANUAL ROTATE LOCK	1
31	64.0868	MOUNT, ROTATOR MOTOR	1
32	99.SF0606	BOLT, SF 3/8-16 USS X 3/4	4
33	99.SF0406	BOLT, SF 1/4-20 X 3/4	2
34	95.10	WASHER, FLAT 5/8 SAE	4
36	00.0217	DECAL, WARNING READ OWNERS MAN	1
37	29.0090	PIPE, BREATHER PLUG 1/8	1
38	99.SF04	NUT, SF 1/4-20 USS (SERIAL # 1001-1525)	4
38	99.SF06	NUT, SF 3/8-16 USS (SERIAL # 1526-)	4
39	60.1056	COVER, PULLEY (SERIAL # 1718-)	2
40	90.0614	BOLT, 3/8-16 USS X 1 3/4 (SERIAL # 1718-)	1
41	99.G0014	WASHER, 3/8 USS FW .165 THK (SERIAL # 1718-)	1
42	83.0013	PULLEY, IDLER FLAT 3/8 X 3 1/2 (SERIAL # 1718-)	1
43	99.SF06	NUT, SRF 3/8-16 USS (SERIAL # 1718-)	1
45	55.0076	BEARING, CUP 1.980	4
46	55.0075	BEARING, CONE 1.000	4
47	04.0026	RETAINING RING, EXT 1.000 SHFT	1
48	89.0075	SEAL, OIL	2
49	89.0080	ASSY, END CAP PRESSURE RELIEF	1
60	55.0080	BEARING, PEERLESS CUP & CONE L	1
61	55.0079	BEARING, PEERLESS CUP & CONE S	3
62	04.0030	RETAINING RING, PRLS GEARBOX	1
63	89.0084	SEAL, OIL INPUT SHAFT	1
64	26.0034	O-RING, FOR 87.0216	2
65	89.0085	SEAL, OIL OUTPUT SHAFT	1

Use only original Ventrac replacement parts.

ILLUSTRATED DRAWING
Fan Housing

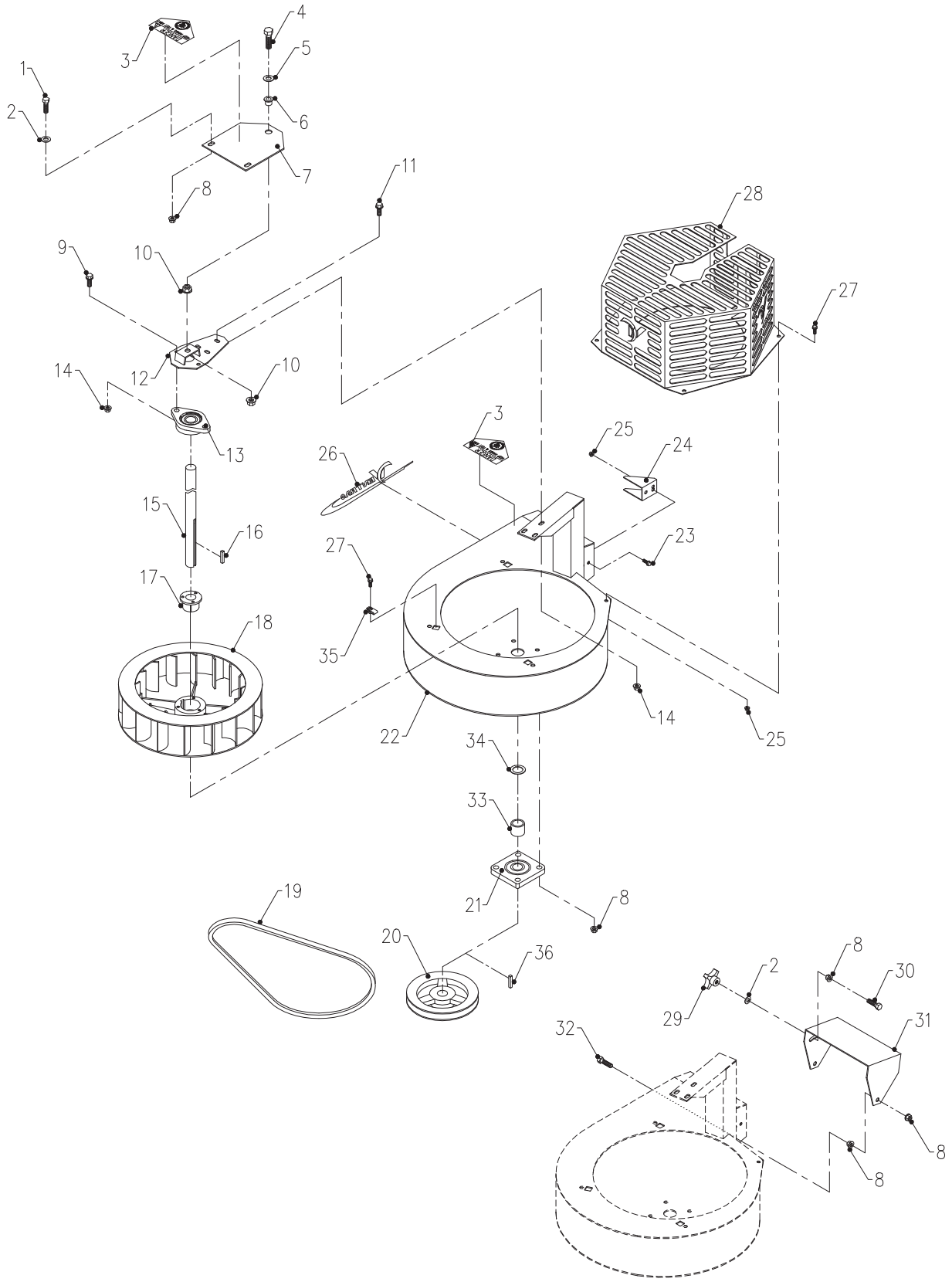

Use only original Ventrac replacement parts.

Fan Housing

REF.	PART NO.	DESCRIPTION	QTY.
1	90.0606	BOLT, 3/8-16 USS X 3/4	2
2	95.06	WASHER, FLAT 3/8 SAE	3
3	00.0123	DECAL, KEEP HAND AND FEET AWAY	2
4	90.0816	BOLT, 1/2-13 USS X 2	1
5	95.08	WASHER, FLAT 1/2 SAE	1
6	85.B0027	BUSHING, 1/2 ID X 5/8 OD X 5/8	1
7	64.0867	MOUNT,UPPER ANCHOR PLATE	1
8	99.SF06	NUT, SF 3/8-16 USS	11
9	99.SF0508	BOLT, SF 5/16-18 USS X 1	2
10	99.SF08	NUT, SF 1/2-13 USS	2
11	99.SF0506	BOLT, SF 5/16-18 USS X 3/4	3
12	64.0866	PLATE, UPPER ANCHOR	1
13	55.FB16016	BEARING, FLANGE BLOCK 1” REGZK	1
14	99.SF05	NUT, SF 5/16-18 USS	5
15	80.0306	SHAFT, FAN KA	1
16	85.K0410	KEY, 1/4 X 1 1/4	1
17	83.P116	BUSHING, 1” P1	1
18	62.0871	FAN, KA/LA	1
19	81.B056	BELT, B56 (SERIAL # 1001-1432)	1
19	81.B057	BELT, B57 (SERIAL # 1433-)	1
20	83.BK6016	PULLEY, 6” 1”BORE	1
21	55.FB22016	BEARING, FLANGE, 1”	1
22	62.1054	HOUSING, FAN KA/LA	1
23	99.SF0404	BOLT, SF 1/4-20 X 1/2	4
24	60.0729	GUARD, HAND/AIR FLOW GUIDE	2
25	99.SF04	NUT, SF 1/4-20 USS	4
26	00.0189	DECAL, VENTRAC ORBITAL	1
27	99.SF0405-1	BOLT, SF 1/4-20 X 5/8 W/RUBBER	4
28	62.0838	FRAME, INTAKE SCREEN	1
29	47.0213	KNOB, 4-ARM 3/8-16 THRU HOLE	1
30	90.0610	BOLT, 3/8-16 USS X 1 1/4	1
31	60.0837	DEFLECTOR, POWER BLOWER	1
32	90.0608	BOLT, 3/8-16 USS X 1	2
33	64.1110	BUSHING, FAN SPACER KA/LA (SERIAL # 1001-1378)	1
33	64.1374	BUSHING, FAN SPACER KA/LA (SERIAL # 1379-)	1
34	99.B0017	WASHER, MACH 1” 18GA (SERIAL # 1001-1378)	1
34	99.B0015	WASHER, MACH 1” 10 GA (SERIAL # 1379-)	2*
35	99.E0046	NUT, “U” 1/4-20 EXTRUDED	3
36	85.K0408	KEY, 1/4 X 1	1

*as required.

Use only original Ventrac replacement parts.

ILLUSTRATED DRAWING
Hydraulic Rotational Control

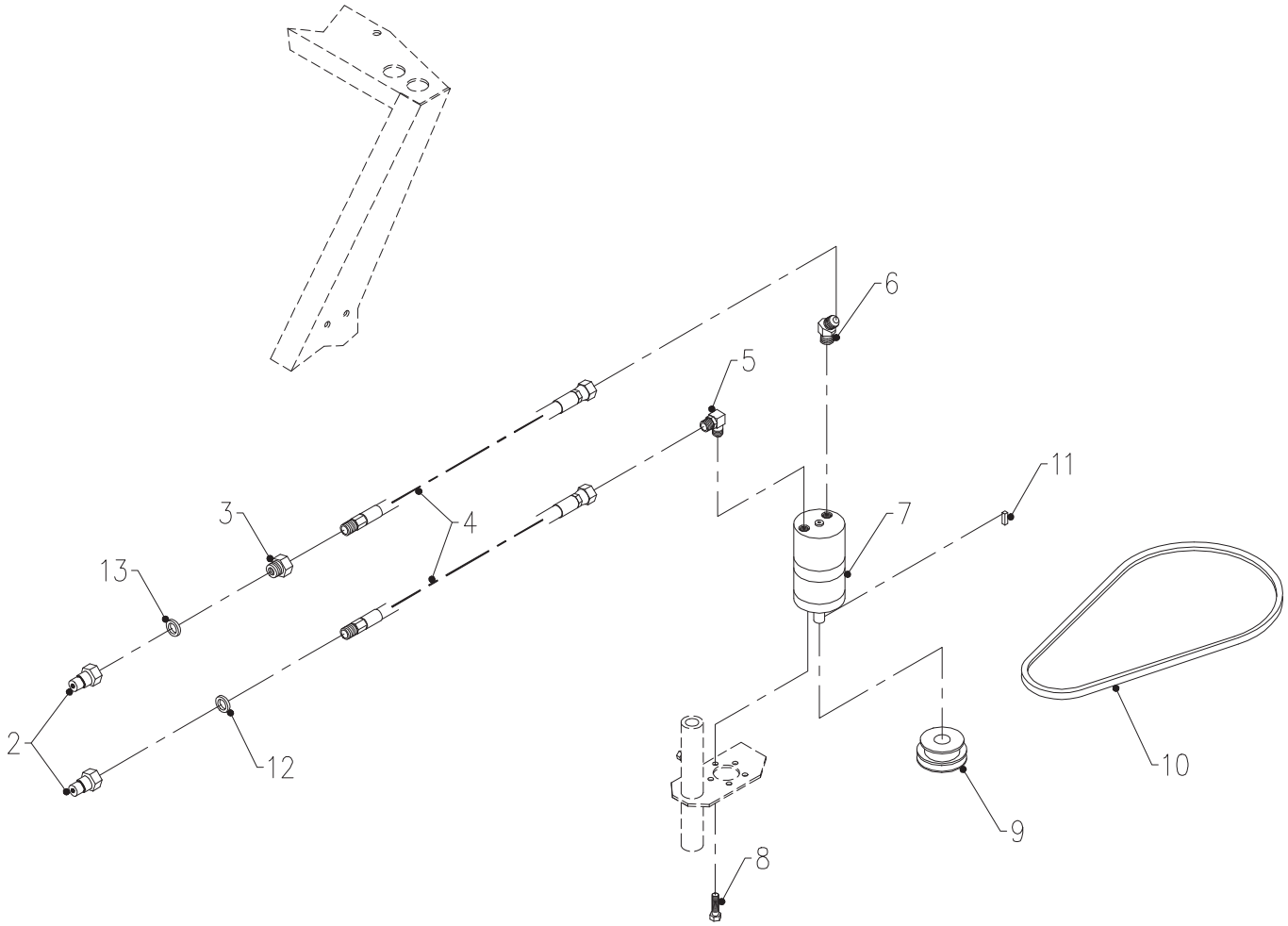

Hydraulic rotational control is a standard feature beginning with serial # AA1097.

Use only original Ventrac replacement parts.

Hydraulic Rotational Control

REF.	PART NO.	DESCRIPTION	QTY.
2	23.0104	COUPLER, HYD. QUICK MALE 1/4	2
3	29.0092	FITTING, .025 ORIFICE 1/4 PIPE	1
4	20.0169	HOSE, ASM X 38” 1/4-1W	2
5	25.6801-06-06	FITTING, 90 ME 3/8 X 3/8	1
6	25.6802-06-06	FITTING, 45 ME 3/8 X 3/8	1
7	21.0113	MOTOR, HYD PEERLESS 1.93 CU.IN	1
8	91.0404	BOLT, 1/4-28 SAE X 1/2	3
9	83.AS1710	PULLEY, AS 1.7” 5/8” BORE	1
10	81.A050	BELT, A50	1
11	85.K0307	KEY, 3/16 X 5/8	1
12	05.0117	WASHER, .544ID X .817 X.14 YEL	1
13	05.0116	WASHER, .544ID X .817 X.14 RED	1

Use only original Ventrac replacement parts.

WARRANTY

LIMITED WARRANTY - VENTRAC TURF EQUIPMENT

Venture Products, Inc. (shall be referred to as V.P.I.) warrants on the terms and conditions herein, that it will repair, replace, or adjust any part manufactured by Venture Products Inc. and found by Venture Products Inc. to be defective in material and / or workmanship.

Effective September 1st 2005, Ventrac warranty on power units & attachments (excluding the HG100/HG150 generator) for **residential use only** is limited to **three (3) years** from original purchase date. Ventrac power units & attachments used **commercially or for any income-producing purpose** is limited to **two (2) years** from original purchase date. Ventrac ET200 turbine blower (turbine only) is limited to **two (2) years** from original purchase date. Ventrac HG100/HG150 generator is limited to **one (1) year** from original purchase date. Ventrac power units & attachments used for **rental** is limited to **180 days** from original purchase date. (**NOTE:** All accessories such as: 3-point hitch, foot pedal, dual wheel kit, etc. will be covered under the above warranty periods as they would apply provided they are installed by an authorized Ventrac dealer.) This warranty may be transferred and will carry the remainder of the warranty starting from the original purchase/registration date with the dealership and/or V.P.I. In the event that product/s originally registered as **(3) year residential use** are to be transferred to a commercial user, the warranty would change to the remainder of **(2) year commercial use** starting from the original purchase/registration date with the dealership and/or V.P.I.

If this warranty covers a consumer product as defined by the Magnusson-Moss warranty act, no warranties, express or implied, (including, but not limited to, the warranty of merchantability or fitness for a particular purpose) shall extend beyond the applicable time period stated in bold face type above.

If this warranty covers a product used commercially or for any income producing purpose, the foregoing warranties are in lieu of all other warranties and no representations, guarantees or warranties, express or implied, (including, but not limited to, a warranty of merchantability or fitness for a particular purpose), are made by V.P.I. in connection with the manufacture or sale of its products.

The engine warranty is covered by its respective engine manufacturer. Please refer to the engine manufacturer's warranty statement that is included in the owner's manual.

The Ventrac turf equipment, including any defective parts, must be returned to an authorized Ventrac dealer within the warranty period. The warranty shall extend to the cost to repair or replace (as determined by V.P.I.) the defective part. **The expense of pickup and delivery of equipment, service call drive time or any transportation expense incurred for warranty repair is the sole responsibility of the owner and is not covered under warranty by Ventrac and/or V.P.I.** V.P.I.'s responsibility in respect to claims is limited to making the required repairs or replacements, and no claim of breach of warranty shall be cause for cancellation or rescission of the contract of sale of any Ventrac equipment. Proof of purchase may be required by the dealer to substantiate any warranty claim. Only warranty work performed and submitted by an authorized Ventrac dealer may be eligible for warranty credit.

This warranty extends only to Ventrac turf equipment operated under normal conditions and properly serviced and maintained. The warranty expressly does **not** cover: (a) any defects, damage or deterioration due to normal use, wear and tear, or exposure; (b) normal maintenance services, such as cleaning, lubrication, oil change; (c) replacement of service items, such as oil, lubricants, spark plugs, belts, rubber hoses or other items subject to normal service replacement; (d) damage or defects arising out of, or relating to abuse, misuse, neglect, alteration, negligence or accident; (e) repair or replacement arising from operation of, or use of the turf equipment which is not in accordance with operating instructions as specified in the operator's manual or other operational instructions provided by V.P.I.; (f) repair or replacement arising as a result of any operation from Ventrac turf equipment that has been altered or modified so as to, in the determination of V.P.I., adversely affect the operation, performance or durability of the equipment

WARRANTY

LIMITED WARRANTY - VENTRAC TURF EQUIPMENT

or that has altered, modified or affected the turf equipment so as to change the intended use of the product; (g) repair or replacement necessitated by the use of parts, accessories or supplies, including gasoline, oil or lubricants, incompatible with the turf equipment or other than as recommended in the operator's manual or other operational instructions provided by V.P.I.; (h) repairs or replacements resulting from parts or accessories which have adversely affected the operation, performance or durability of the turf equipment; or (i) damage or defects due to or arising out of repair of Ventrac turf equipment by person or persons other than an authorized Ventrac service dealer or the installation of parts other than genuine Ventrac parts or Ventrac recommended parts.

The sole liability of V.P.I. with respect to this warranty shall be repair and replacement as set forth herein. V.P.I. shall have no liability for any other cost, loss, or damage. In particular V.P.I shall have no liability or responsibility for: (i) expenses relating to gasoline, oil, lubricants; (ii) loss, cost, or expense relating to transportation or delivery of turf equipment from the location of owner or location where used by owner to or from any authorized Ventrac dealer; (iii) travel time, overtime, after hours time or other extraordinary repair charges or charge relating to repairs or replacements outside of normal business hours at the place of business of an authorized Ventrac dealer; (iv) rental of like or similar replacement equipment during the period of any warranty repair or replacement work; (v) any telephone or telegram charges; (vi) loss or damage to person or property other than that covered by the terms of this warranty; (vii) any claims for lost revenue, lost profit or additional cost or expense incurred as a result of a claim of breach of warranty; or (viii) attorney's fees.

The remedies of buyer set forth herein are exclusive and are in lieu of all other remedies. The liability of V.P.I., whether in contract, tort, under any warranty, or otherwise, shall not extend beyond its obligation as set forth herein. V.P.I. shall not be liable for cost of removal or installation nor shall V.P.I. be responsible for any direct, indirect, special or consequential damages of any nature. In no event shall V.P.I. be liable for any sum in excess of the price received for the goods for which liability is claimed.

There are no representations or warranties which have been authorized to the buyer of the turf equipment other than set forth in this warranty. Any and all statements or representations made by any seller of this equipment, including those set forth in any sales literature or made orally by any sales representative, are superseded by the terms of this warranty. Any affirmation of fact or promise made by V.P.I. or any of its representatives to the buyer which relates to the goods that are the subject to this warranty shall not be regarded as part of the basis of the bargain and shall not be deemed to create any express warranty that such goods shall conform to the affirmation or promise.

No employee, distributor, or representative is authorized to change the foregoing warranties in any way or grant any other warranty on behalf of V.P.I.

Some states do not allow limitations on how long an implied warranty lasts or allow the exclusion on limitation of incidental or consequential damages, so the above limitation or exclusion may not apply to you.

This warranty gives you specific legal rights, and you may also have other rights which vary from state to state.

This warranty applies to all Ventrac turf equipment sold in the United States and Canada.