Operator's Manual & Parts Drawings

Stump Grinder

Model KC180

Ventrac by Venture Products Inc.

Ventrac® Mount System

Revised 04/26/13
09.10017 Rev. 02

328 East Water St.
PO Box 148
Orrville Oh 44667
www.ventrac.com

To the Owner
Contact Information and Product Identification

If you need to contact an authorized Ventrac dealer for information on servicing your product, always provide the product model and serial numbers.

Please fill in the following information for future reference. See the picture(s) below to find the location of the identification numbers. Record them in the spaces provided.

Date of Purchase: _____

Dealer: _____

Dealer Address: _____

_____

Dealer Phone Number: _____

Dealer Fax Number: _____

Model # (A): _____

Serial # (B): _____

Affix Part/Serial Number label here.

Venture Products Inc. reserves the right to make changes in design or specifications without obligation to make like changes on previously manufactured products.

TABLE OF CONTENTS

INTRODUCTION **PAGE 4**

Product Description....4
Why Do I Need an Operator's Manual?....4
Using Your Manual....5
Manual Glossary....5

SAFETY **PAGE 6**

Safety Decals....6
General Safety Procedures....7
Training Required....7
Personal Protective Equipment Requirements....7
Operation Safety....7
Preventing Accidents....8
Keep Riders Off....8
Operating On Slopes....9
Roadway Safety....9
Truck Or Trailer Transport....9
Maintenance....10
Fuel Safety....10
Hydraulic Safety....11
KC180 Safety Procedures....12

SETUP **PAGE 13**

Mirror Installation....13

GENERAL OPERATION **PAGE 14**

Daily Inspection....14
Attaching....14
Detaching....14
Operating Procedure....14

SERVICE **PAGE 15**

General Maintenance....15

SPECIFICATIONS **PAGE 16**

Dimensions....16
Features....16

PARTS **PAGE 18**

Main Frame & Shields....18
Drive & Pulleys....20
Mirror Bracket....22

WARRANTY **PAGE 24**

INTRODUCTION

Venture Products Inc. is pleased to provide you with your new Ventrac stump grinder! We hope that Ventrac equipment will provide you with a ONE Tractor Solution.

Product Description

The KC180 stump grinder is designed solely for the purpose of grinding tree stumps and roots. The KC180 stump grinder makes quick work of removing unwanted stumps and roots. Heavy duty carbide cutters provide extended and effective performance in spite of dirt, stones, and debris in the work area.

A special convex mirror mounted to the power unit provides operator visibility to the front cutting edge.

Steering wheel controlled articulation provides side-to-side cutting action.

Why Do I Need an Operator's Manual?

This manual has been created to help you gain the important knowledge of what is needed to safely operate, maintain, and service your machine. It is divided into sections for convenient reference of the appropriate section.

You must read and understand the operator's manual for each piece of Ventrac equipment you own. Reading the operator's manual will help you become familiar with each specific piece of equipment. Understanding the operator's manual will help you, as well as others, avoid personal injury and/or damage to the equipment. Keep this manual with the machine at all times. The manual should remain with the machine even if it is sold. If this manual becomes damaged or unreadable, it should be replaced immediately. Contact your local Ventrac dealer for a replacement.

When using a Ventrac attachment, be sure to read and follow the safety and operating instructions of both the power unit and the attachment being used to ensure the safest operation possible.

The information in this manual provides the operator with the safest procedures to operate the machine while getting the maximum use out of the unit. Failure to follow the safety precautions listed in this manual may result in personal injury and/or damage to the equipment.

INTRODUCTION

Using Your Manual

Throughout this manual, you will encounter special messages and symbols that identify potential safety concerns to help you as well as others avoid personal injury or damage to the equipment.

SYMBOL DEFINITIONS

ATTENTION

This symbol identifies potential health and safety hazards. It marks safety precautions. Your safety and the safety of others is involved.

There are three signal words that describe the level of safety concern: Danger, Warning, and Caution. Safety should always be the #1 priority when working on or operating equipment. Accidents are more likely to occur when proper operating procedures are not followed or inexperienced operators are involved.

Note: Right-Hand and Left-Hand orientations may be referred to at different places throughout this manual. Right-Hand and Left-Hand is determined as if sitting on the power unit seat facing forward.

SIGNAL WORD DEFINITIONS

⚠ DANGER

Indicates an imminently hazardous situation which, if not avoided, will result in death or serious injury. This signal word is limited to the most extreme cases.

⚠ WARNING

Indicates a potentially hazardous situation which, if not avoided, could result in death or serious injury.

⚠ CAUTION

Indicates a potentially hazardous situation which, if not avoided, may result in minor or moderate injury and/or property damage. It may also be used to alert against unsafe practices.

Manual Glossary

Power Unit A Ventrac tractor or other Ventrac engine powered device that may be operated by itself or with an attachment or accessory.

Attachment A piece of Ventrac equipment that requires a Power Unit for operation.

Accessory A device that attaches to a Power Unit or Attachment to extend its capabilities.

Machine Describes any “Attachment” or “Accessory” that is used in conjunction with a power unit.

Safety Decals

The following safety decals must be maintained on your stump grinder.

Keep all safety decals legible. Remove all grease, dirt, and debris from safety decals and instructional labels. If any decals are faded, illegible, or missing, contact your dealer promptly for replacements.

When new components are installed, be sure that current safety decals are affixed to the replacement components.

A

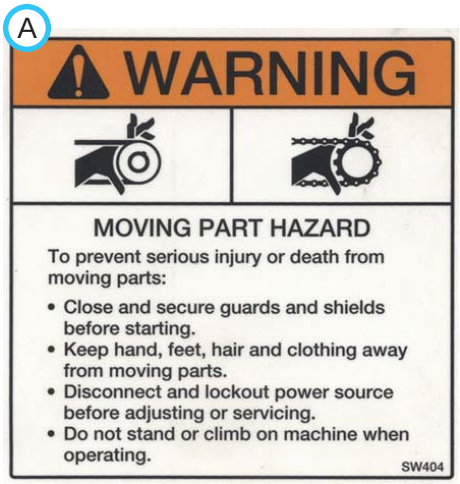

B

C

D

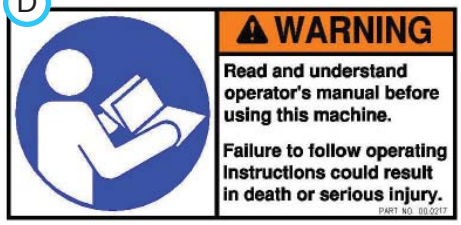

Decal	Description	Part Number	Quantity
A	Warning, Moving Part Hazard	00.0101	1
B	Danger, Pinching Hazard	00.0102	1
C	Danger, Keep Hands & Feet Clear	00.0123	1
D	Warning, Read Owner’s Manual	00.0217	1

General Safety Procedures for Ventrac Power Units, Attachments, & Accessories

Training Required

- The owner of this machine is solely responsible for properly training the operators.
- The owner/operator is solely responsible for the operation of this machine and prevention of accidents or injuries occurring to him/herself, other people, or property.
- Do not allow operation or service by children or untrained personnel. Local regulations may restrict the age of the operator.
- Before operating this machine, read the operator's manual and understand its contents.
- If the operator of the machine cannot understand this manual, then it is the responsibility of this machine's owner to fully explain the material within this manual to the operator.
- Learn and understand the use of all controls.
- Know how to stop the power unit and all attachments quickly in the event of an emergency.

Personal Protective Equipment Requirements

It is the responsibility of the owner to be sure that the operators use the proper personal protective equipment while operating the machine. Required personal protective equipment includes, but is not limited to, the following list.

- Wear a certified ear protection device to prevent loss of hearing.
- Prevent eye injury by wearing safety glasses while operating the machine.
- Closed toe shoes must be worn at all times.
- Long pants must be worn at all times.
- When operating in dusty conditions, it is recommended that a dust mask be worn.

Operation Safety

- Inspect machine before operation. Repair or replace any damaged, worn, or missing parts. Be sure guards and shields are in proper working condition and are secured in place. Make all necessary adjustments before operating machine.
- Some pictures in this manual may show shields or covers opened or removed in order to clearly illustrate any instructions. Under no circumstance should the machine be operated without these devices in place.
- Alterations or modifications to this machine can reduce safety and could cause damage to the machine. Do not alter safety devices or operate with shields or covers removed.
- Before each use, verify that all controls function properly and inspect all safety devices. Do not operate if controls or safety devices are not in proper working condition.
- Check parking brake function before operating. Repair or adjust parking brake if necessary.
- Observe and follow all safety decals.
- All controls are to be operated from the operator's seat only.
- Always wear a seat belt if the machine has a roll cage/bar installed and in upright position.
- Ensure the attachment or accessory is locked or fastened securely to the power unit before operating.
- Ensure that all bystanders are clear of the power unit and attachment before operating. Stop machine if someone enters your work area.
- Always be alert to what is happening around you, but do not lose focus on the task you are performing. Always look in the direction the machine is moving.
- Look behind and down before backing up to be sure of a clear path.
- If you hit an object, stop and inspect the machine. Make all necessary repairs before operating machine again.
- Stop operation immediately at any sign of equipment failure. An unusual noise can be a warning of equipment failure or a sign that maintenance is required. Make all necessary repairs before operating machine again.

General Safety Procedures for Ventrac Power Units, Attachments, & Accessories

Operation Safety (continued)

- If equipped with a high/low range feature, never shift between high and low range while on a slope. Always move the machine to level ground and engage the parking brake before shifting range.
- Do not leave machine unattended while it is running.
- Always park the machine on level ground.
- Always shut off engine when connecting attachment drive belt to the power unit.
- Never leave the operator's seat without lowering the attachment to the ground, setting the parking brake, shutting off the engine, and removing the ignition key. Make sure all moving parts have come to a complete stop before dismounting.
- Never leave equipment unattended without lowering the attachment to the ground, setting the parking brake, shutting off the engine, and removing the ignition key.
- Only operate in well-lit conditions.
- Do not operate when there is a risk of lightning.
- Never direct the discharge of any attachment in the direction of people, buildings, animals, vehicles, or other objects of value.
- Never discharge material against a wall or obstruction. Material may ricochet back towards the operator.
- Use extra caution when approaching blind corners, shrubs, trees, or other objects that may obscure vision.
- Do not run the engine in a building without adequate ventilation.
- Do not touch the engine or the muffler while the engine is running or immediately after stopping the engine. These areas may be hot enough to cause a burn.
- Do not change the engine governor settings or over-speed the engine. Operating engine at excessive speed may increase the hazard of personal injury.
- To reduce the hazard of fire, keep the battery compartment, engine, and muffler areas free of grass, leaves, and excessive grease.

Preventing Accidents

- Clear working area of objects that might be hit or thrown from machine.
- Keep people and pets out of mowing area.
- Know the work area well before operation. Do not operate where traction or stability is questionable.
- Reduce speed when you are operating over rough ground.
- Equipment can cause serious injury and/or death when improperly used. Before operating, know and understand the operation and safety of the power unit and the attachment being used.

- Do not operate machine if you are not in good physical and mental health, if you will be distracted by personal devices, or are under the influence of any substance which might impair decision, dexterity, or judgment.
- Children are attracted to machine activity. Be aware of children and do not allow them in the working area. Turn off the machine if a child enters the work area.

Keep Riders Off

- Only allow the operator on the power unit. Keep riders off.
- Never allow riders on any attachment or accessory.

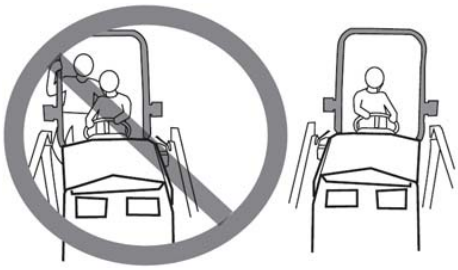

General Safety Procedures for Ventrac Power Units, Attachments, & Accessories

Operating On Slopes

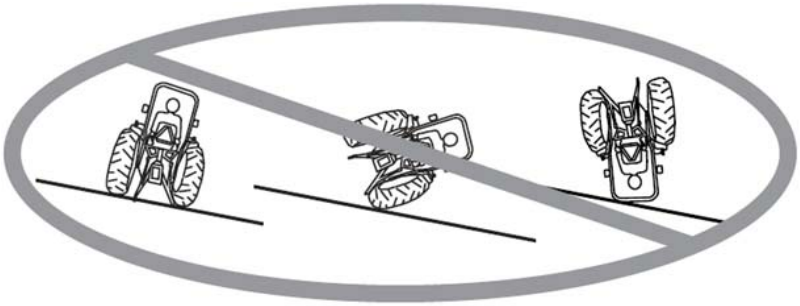

- Slopes can cause loss-of-control and tip-over accidents, which can result in severe injury or death. Be familiar with the emergency parking brake, along with the power unit controls and their functions.
- If power unit is equipped with a fold down roll bar, it must be locked in the upright position when operating on any slope.
- Use low range (if equipped) when operating on slopes greater than 15 degrees.
- Do not stop or start suddenly when operating on slopes.
- Never shift between high and low range while on a slope. Always move the power unit to level ground and engage the parking brake before shifting range or placing the power unit in neutral.
- Variables such as wet surface and loose ground will reduce the degree of safety. Do not drive where machine could lose traction or tip over.
- Keep alert for hidden hazards in the terrain.
- Stay away from drop-offs, ditches, and embankments.
- Sharp turns should be avoided when operating on slopes.
- Pulling loads on hills decreases safety. It is the responsibility of the owner/operator to determine loads that can safely be controlled on slopes.
- Transport machine with attachment lowered or close to the ground to improve stability.
- While operating on slopes, drive in an up and down direction when possible. If turning is necessary while driving across slopes, reduce speed and turn slowly in the downhill direction.
- Assure a sufficient supply of fuel for continuous operation. A minimum of one-half tank of fuel is recommended.

Roadway Safety

- Operate with safety lights when operating on or near roadways.
- Obey all state and local laws concerning operation on roadways.
- Slow down and be careful of traffic when operating near or crossing roadways. Stop before crossing roads or sidewalks. Use care when approaching areas or objects that may obscure vision.
- If there is doubt of safety conditions, discontinue machine operation until a time when operation can be performed safely.
- When operating near or on roadways, have a Slow Moving Vehicle Emblem clearly displayed.

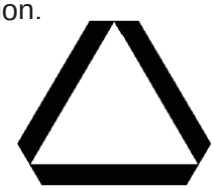

Truck Or Trailer Transport

- Use care when loading or unloading machine into a truck or trailer.
- The parking brake is not sufficient to lock the machine during transport. Always secure the power unit and/or attachment to the transporting vehicle.
- Shut off fuel supply to power unit during transport on truck or trailer.
- If equipped, turn the battery disconnect switch to the Off position to shut off electrical power.

General Safety Procedures for Ventrac Power Units, Attachments, & Accessories

Maintenance

- Keep all safety decals legible. Remove all grease dirt, and debris from safety decals and instructional labels.
- If any decals are faded, illegible, or missing, contact your dealer promptly for replacements.
- When new components are installed, be sure that current safety decals are affixed to the replacement components.
- If any component requires replacement, use only original Ventrac replacement parts.
- Always disconnect the negative battery cable from the battery when working with electrical components.
- Keep all bolts, nuts, screws, and other fasteners properly tightened.
- Always lower the attachment to the ground, engage parking brake, shut off engine, and remove the ignition key. Make sure all moving parts have come to a complete stop before cleaning, inspection, adjusting or repairing.
- If the power unit, attachment, or accessory requires repairs or adjustments not instructed in the operator's manual, the power unit, attachment, or accessory must be taken to an authorized Ventrac dealer for service.
- Never perform maintenance on the power unit and/or attachment if someone is sitting in the operator's seat.
- Always use protective glasses when handling the battery.
- Check all fuel lines for tightness and wear on a regular basis. Tighten or repair them as needed.
- To reduce the hazard of fire, keep the battery compartment, engine, and muffler areas free of grass, leaves, and excessive grease.
- Do not touch the engine, the muffler, or other exhaust components while the engine is running or immediately after stopping the engine. These areas may be hot enough to cause a burn.
- Do not change the engine governor settings or over-speed the engine. Operating engine at excessive speed may increase the hazard of personal injury.
- Springs may contain stored energy. Use caution when disengaging or removing springs and/or spring loaded components.
- An obstruction or blockage in a drive system or moving/rotating parts may cause a buildup of stored energy. When the obstruction or blockage is removed, the drive system or moving/rotating parts may move suddenly. Do not attempt to remove an obstruction or blockage with your hands. Keep hands, feet, and clothing away from all power-driven parts.
- Dispose of all fluids in accordance with local laws.

Fuel Safety

- Do not refuel machine while smoking or at a location near flames or sparks.
- Always refuel the machine outdoors.
- Do not store machine or fuel container indoors where fumes or fuel can reach an open flame, spark, or pilot light.
- Only store fuel in an approved container. Keep out of reach of children.
- Never remove fuel cap or add fuel with the engine running. Allow engine to cool before refueling.
- Replace all fuel tank and container caps securely.
- Do not overfill fuel tank.
- If fuel is spilled, do not attempt to start the engine. Move the power unit away from the fuel spill and avoid creating any source of ignition until fuel vapors have dissipated.
- If the fuel tank must be drained, it should be drained outdoors into an approved container.
- Dispose of all fluids in accordance with local laws.
- Check all fuel lines for tightness and wear on a regular basis. Tighten or repair them as needed.
- The fuel system is equipped with a shut-off valve. Shut off the fuel when transporting the machine to and from the job, when parking the machine indoors, or when servicing the fuel system.

General Safety Procedures for Ventrac Power Units, Attachments, & Accessories

Hydraulic Safety

- Make sure all hydraulic connections are tight and all hydraulic hoses and tubes are in good condition. Repair any leaks and replace any damaged or deteriorated hoses or tubes before starting the machine.
- Hydraulic leaks can occur under high pressure. Hydraulic leaks require special care and attention.
- Use a piece of cardboard and a magnifying glass to locate suspected hydraulic leaks.

- Keep body and hands away from pinhole leaks or nozzles that eject high pressure hydraulic fluid. Hydraulic fluid escaping under high pressure can penetrate the skin causing serious injury. If hydraulic fluid is injected into skin, seek immediate medical attention.

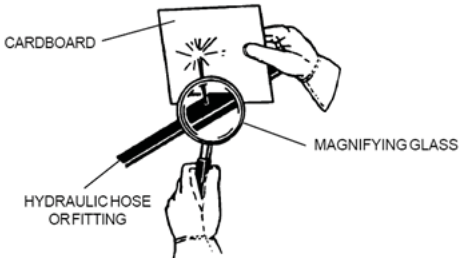

- Hydraulic system may contain stored energy. Before performing maintenance or repairs on the hydraulic system, remove attachments, engage parking brake, disengage weight transfer system (if equipped), shut off engine, and remove ignition key. To relieve pressure on the auxiliary hydraulic system, shut off the power unit engine and move the secondary S.D.L.A. lever left and right before disconnecting the auxiliary hydraulic quick couplers.
- Dispose of all fluids in accordance with local laws.

KC180 Safety Procedures

- Always wear hearing and eye protection when operating the stump grinder.
- Set up power unit and stump grinder so that particles are directed away from buildings or other objects of value.
- During the grinding process, objects can be propelled from the stump grinder causing injury or damage to people, animals, buildings, vehicles, or other objects of value. Block access to the area prior to grinding stumps. Use plywood or equivalent shielding to protect nearby building or objects. If access to the area cannot be prevented, use plywood or equivalent shielding to protect pedestrian areas.
- Stop grinding immediately if the cutter head strikes a rock or other solid object. Damage to the cutting teeth or the cutter head may occur.
- Do not operate with any of the cutting teeth missing. This causes the cutter head to become unbalanced and may cause damage to the stump grinder.

Mirror Installation

1. Install the left and right mirror attachment brackets to the sides of the power unit's front frame.

HT4000: Remove the 6) bolts that fasten the front bumper to the power unit. Install the mirror attachment brackets to the power unit using 6) 5/16" x 1" bolts, 6) 5/16" flat washers, and 4) 5/16" flat washers (from original mounting bolts) between the 2) top holes in the brackets and the power unit to level the mounting surface. Fasten with the original nuts and torque to 210 in-lbs (24 Nm).
NOTE: if your HT4000 is equipped with a Kawasaki engine, the mirror bracket hole spacing will require modification.

KT4100, KT4200, & KN4500: Remove the 4) bolts that fasten the front bumper to the front frame. Install the mirror attachment brackets to the power unit using 4) 5/16" x 1" bolts, 4)5/16" flat washers. Fasten with the original nuts and torque to 210 in-lbs (24 Nm).

2. Assemble the 2) mirror arms using 2) 3/8" x 1-1/4" bolts, 4) 3/8" flat washers, and 4) 3/8" lock nuts. Leave the hardware loose enough that the arms can be adjusted later.

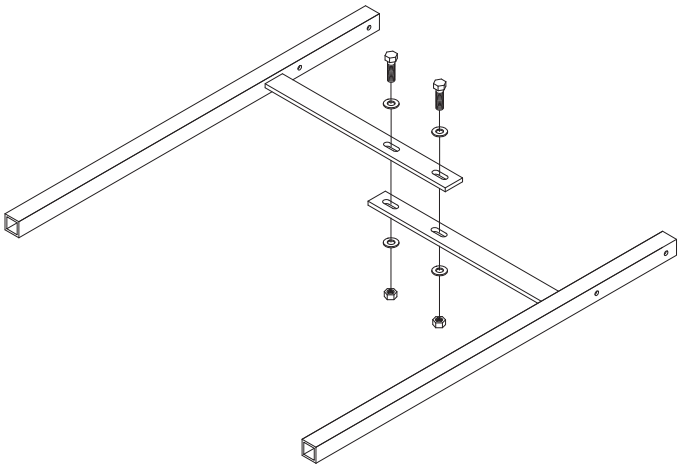

3. Install the mirror arms an equal distance into the mirror attachment brackets and secure them with the tightener handles.
4. Mount the mirror frame to the outer ends of the mirror arms. For a trial setting, select a hole near the center of the adjustment options. Use the identical hole on the opposite side. Fasten to the mirror arms with 2) 1/4" x 1-1/2" bolts, 4) 1/4" flat washers, and 2) 1/4" lock nuts.

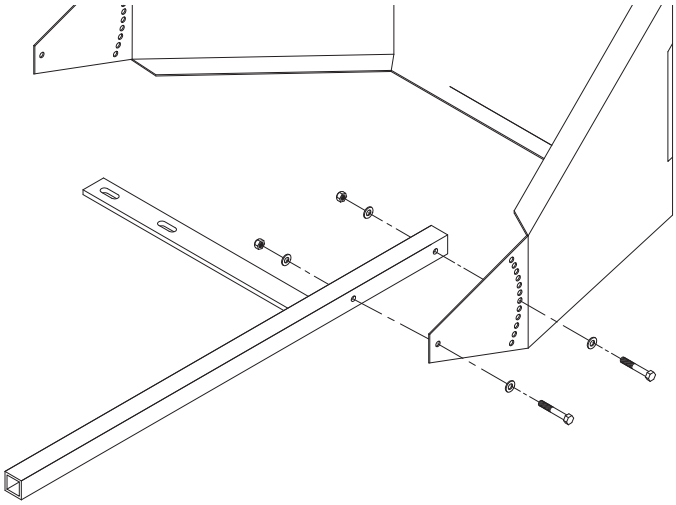

5. Fasten the pivot holes in the ends of the mirror frame to the mirror arms with 2) 1/4" x 1-1/2" bolts, 4) 1/4" flat washers, and 2) 1/4" lock nuts.
6. Sit on the power unit seat to determine if the settings allow the operator to see the action of the grinder. Make any necessary adjustments and tighten the hardware that fastens the mirror frame to the mirror arms.

Remove the mirror from the power unit when not using the stump grinder. Loosen the tightener handles and slide the mirror arms out of the mirror attachment brackets. Clean the mirror of any dust and debris and store in a safe place.

Daily Inspection

⚠ WARNING

Always set the parking brake, shut off power unit engine, remove the ignition key, and ensure all moving parts have come to a complete stop before inspecting components, or attempting any repair or adjustment.

1. Park machine on a level surface, with the engine shut off and all fluids cold.
2. Perform a visual inspection of both the power unit and the stump grinder. Look for loose or missing hardware, damaged components, or signs of wear.
3. Inspect the drive belts. Belts should be in good condition.
4. Inspect the cutting teeth for wear and service as required.
5. Refer to the power unit operator's manual. Check the power unit's engine oil, hydraulic oil, cooling system, tire pressure, and fuel level. Add fluid or service as required.
6. Test the power unit's operator safety interlock system*.

Attaching

1. Drive the power unit slowly forward into the hitch arms of the stump grinder. Align the lift arms of the power unit with the stump grinder hitch arms by raising or lowering the front hitch and complete the engagement.
2. Once completely engaged, close the front hitch locking lever.*
3. Engage the parking brake* and shut off the engine.
4. Place the attachment belt onto the PTO drive pulley on the power unit. Ensure the belt is properly seated in each pulley.
5. Engage the PTO belt tension spring.
6. Raise the stand to give maximum ground clearance.
7. Slide the mirror arms into the mirror attachment brackets mounted on the front frame of the power unit. Secure them with the tightener handles.

Detaching

1. Park the power unit on a level surface and engage the parking brake.*
2. Lower the stump grinder to the ground.
3. Shut off power unit engine.
4. Disengage the PTO belt tension spring.
5. Remove the attachment belt from the PTO drive pulley of the power unit.
6. Lower the stand to support the stump grinder.
7. Disengage the front hitch latch.
8. Restart the power unit and back slowly away from the stump grinder.

Operating Procedure

⚠ WARNING

During the grinding process, objects can be propelled from the stump grinder causing injury or damage to people, animals, buildings, vehicles, or other objects of value. Block access to the area prior to grinding stumps. Use plywood or equivalent shielding to protect nearby building or objects. If access to the area cannot be prevented, use plywood or equivalent shielding to protect pedestrian areas.

Before grinding, cut the stump as low to the ground as possible with a chain saw.

Set the power unit's transaxles to low range.

Move the stump grinder into position above the closest edge of the stump.

With the power unit engine running between 2,000 and 2,500 RPM, engage the PTO switch. Adjust the throttle to the desired engine RPM.

Slowly lower the stump grinder until it begins to cut. Turn the power unit's steering wheel left and right to sweep the cutter head across the stump. After each pass, lower the grinder a little more and repeat the process. If the grinder is lowered to much at one time, it will not allow the power unit to be steered. Lift the grinder slightly to continue side-to-side grinding.

After removing several inches on larger stumps, it is necessary to drive forward and repeat the process. Also on larger stumps, it is advisable to approach from several different angles, if possible.

Follow this procedure until the stump is cut to the desired depth below the ground surface.

There are variables in stumps. Hardwoods cut much slower than softwoods. Partially decayed stumps may cut easy in some spots, but still have some hard spots or tough roots.

Do not grind in a position that allows the teeth to be in continuous contact with a rock.

* Refer to power unit operator's manual for operation of power unit controls.

⚠ WARNING

Always set the parking brake, shut off power unit engine, remove the ignition key, and ensure all moving parts have come to a complete stop before inspecting components or attempting any repair or adjustment.

⚠ Attention

If any component requires replacement, use only original Ventrac replacement parts.

General Maintenance

Grease the bearings every 50 hours. Do not over grease. Usually one pump is sufficient.

Check the gearbox oil every 100 hours or seasonally, whichever comes first. If necessary, add 80-90 weight gear oil. Oil level should be halfway up gearbox.

The cutter teeth (KC180 serial # 1231 and higher) have three shoulders. If a tooth becomes dull or damaged, loosen the top nut, tap the tooth down, rotate the tooth 1/3 of a turn, and retighten the top nut.

Cutter teeth can be sharpened with the proper equipment. Sharpening carbide teeth requires a special process. See your authorized Ventrac dealer for replacement parts or instructions for sharpening existing teeth. Teeth that have lost more than 1/8” (3 mm) of original bite must be replaced.

Occasionally the 3) cutter head drive belts may need to be tightened. The following procedure MUST be used in order to keep the cutter head and shaft in line with the frame.

1. Park the power unit on a level surface and engage the parking brake.
2. Shut off the power unit engine and remove the key from the key switch.
3. Loosen the 4) nuts (A) on the bearings on either side of the cutter head.

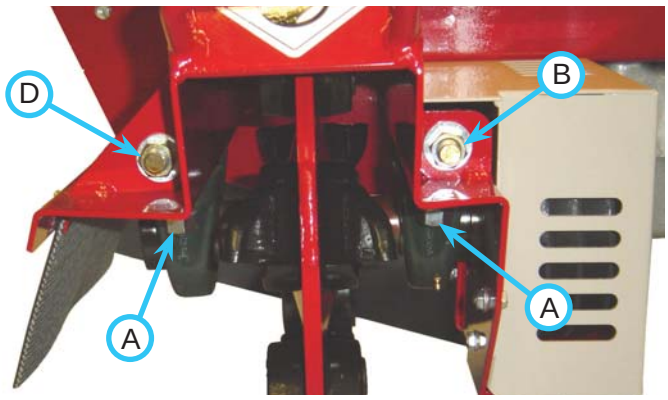

4. Loosen the locking nut (C) on the back of the right adjustment plate. Loosen the locking nut (D) on the front of the left adjustment plate.

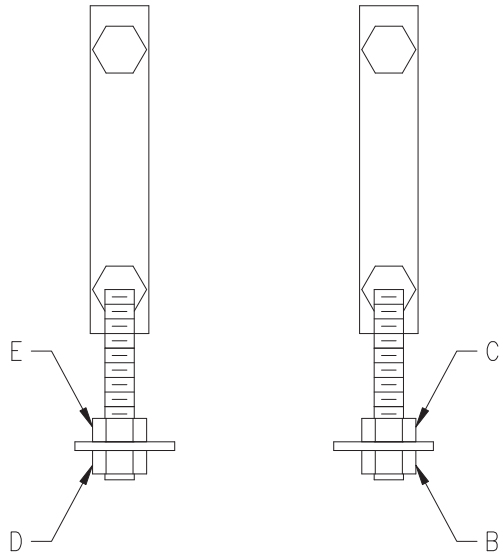

5. Tighten the belts by tightening the nut (B) on the front of the right adjustment plate while loosening the nut (E) on the back of the left adjustment plate accordingly. ALWAYS adjust the nuts (B & E) equally, so that the rotor shaft remains parallel to the gearbox shaft.
6. After the belts are tight, tighten the locking nuts (C & D).
7. Tighten the 4) nuts (A) on the bearings.

SPECIFICATIONS

Dimensions

Overall Height	19 inches (48.3 cm)
Overall Length	33 inches (83.8 cm)
Overall Width	27 inches (68.6 cm)
Overall Head Width	3.5 inches (8.9 cm)
Overall Cutter Head Diameter	18 inches (45.7 cm)
Cutter Head Speed	900 RPM
Cutting Depth Below Ground Level	6 inches (15.2 cm)
Weight	170 pounds (77.1 kg)

Features

16 carbide teeth (3 sided and replaceable).

Convex mirror for safely viewing the operation from the power unit.

Blank Page

ILLUSTRATED DRAWING
Main Frame & Shields

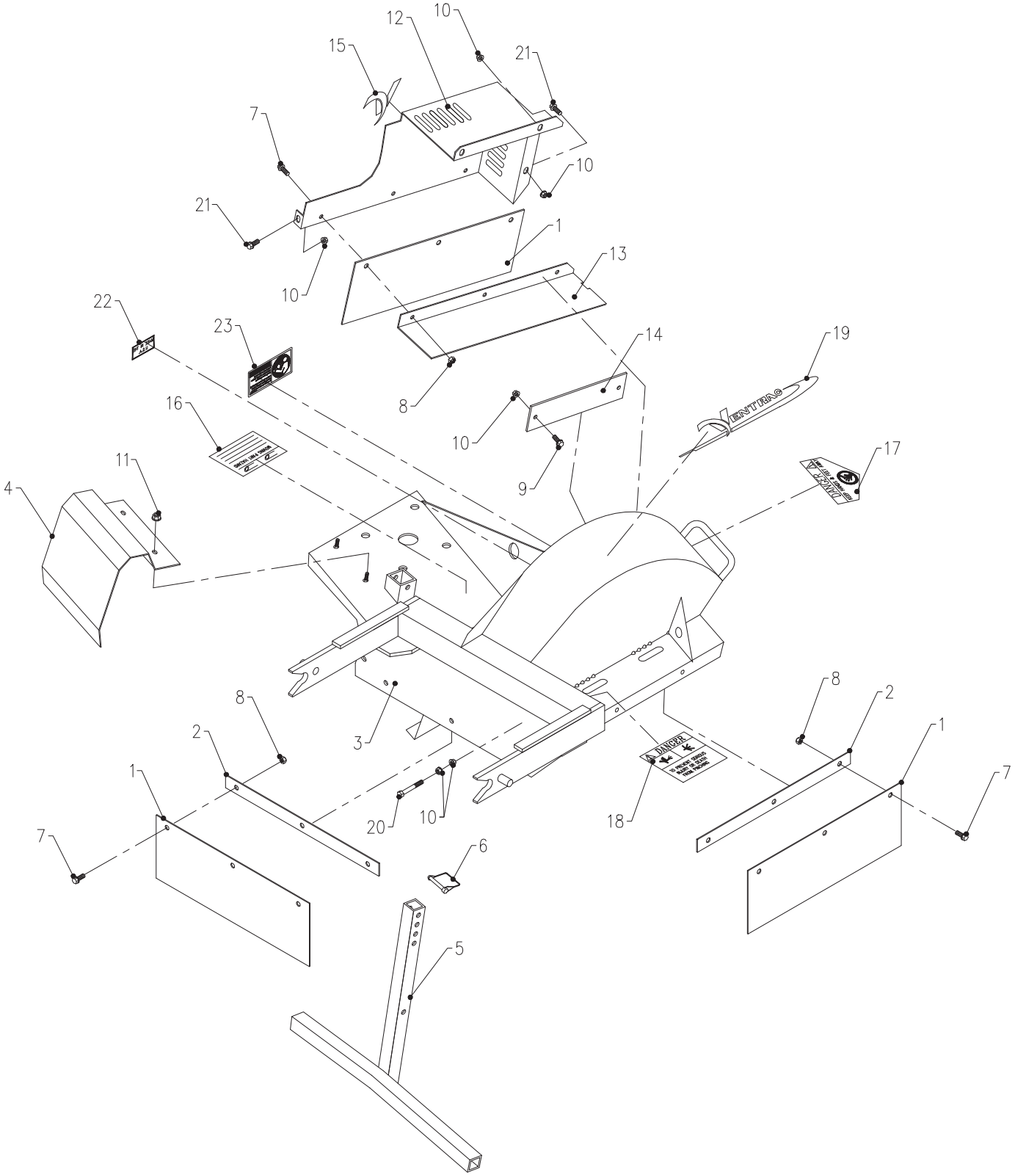

Use only original Ventrac replacement parts.

Main Frame & Shields

REF.	PART NO.	DESCRIPTION	QTY.
1	44.0195	SHIELD, RUBBER	3
2	64.0958	BAR, RUBBER CLAMP	2
3	62.0911	FRAME, MAIN & HITCH	1
4	60.0818	SHIELD, DRIVE BELT GEARBOX	1
5	64.0957	STAND, SUPPORT	1
6	03.0009	PIN, SAFETY SNAP 1/4 X 1-3/8	1
7	99.SF0405-1	BOLT, SMF 1/4-20 X 5/8	9
8	99.A04	LOCKNUT, STOVER 1/4-20 USS	9
9	99.SF0404	BOLT, SRF 1/4-20 X 1/2	2
10	99.SF04	NUT, SRF 1/4-20 USS	8
11	99.SF05	NUT, SRF 5/16-18 USS	2
12	60.0816	SHIELD, MAIN DRIVE COVER	1
13	60.0817	SHIELD, BOTTOM FINAL BELTS	1
14	64.0956	COVER, ROTOR OPENING	1
15	00.0192	DECAL, V-DECAL DIE CUT BLUE	1
16	00.0101	DECAL, HAZARD-MOVING PART	1
17	00.0123	DECAL, KEEP HANDS & FEET CLEAR	1
18	00.0102	DECAL, DANGER-PINCHING HAZARD	1
19	00.0189	DECAL, VENTRAC ORBITAL	1
20	90.0412	BOLT, 1/4-20 USS X 1 1/2	1
21	99.SF0404-1	BOLT, SMF 1/4-20 X 1/2	2
22	00.0100	DECAL, MADE IN USA	1
23	00.0217	DECAL, WARNING READ OWNERS MAN	1

Use only original Ventrac replacement parts.

ILLUSTRATED DRAWING
Drive & Pulleys

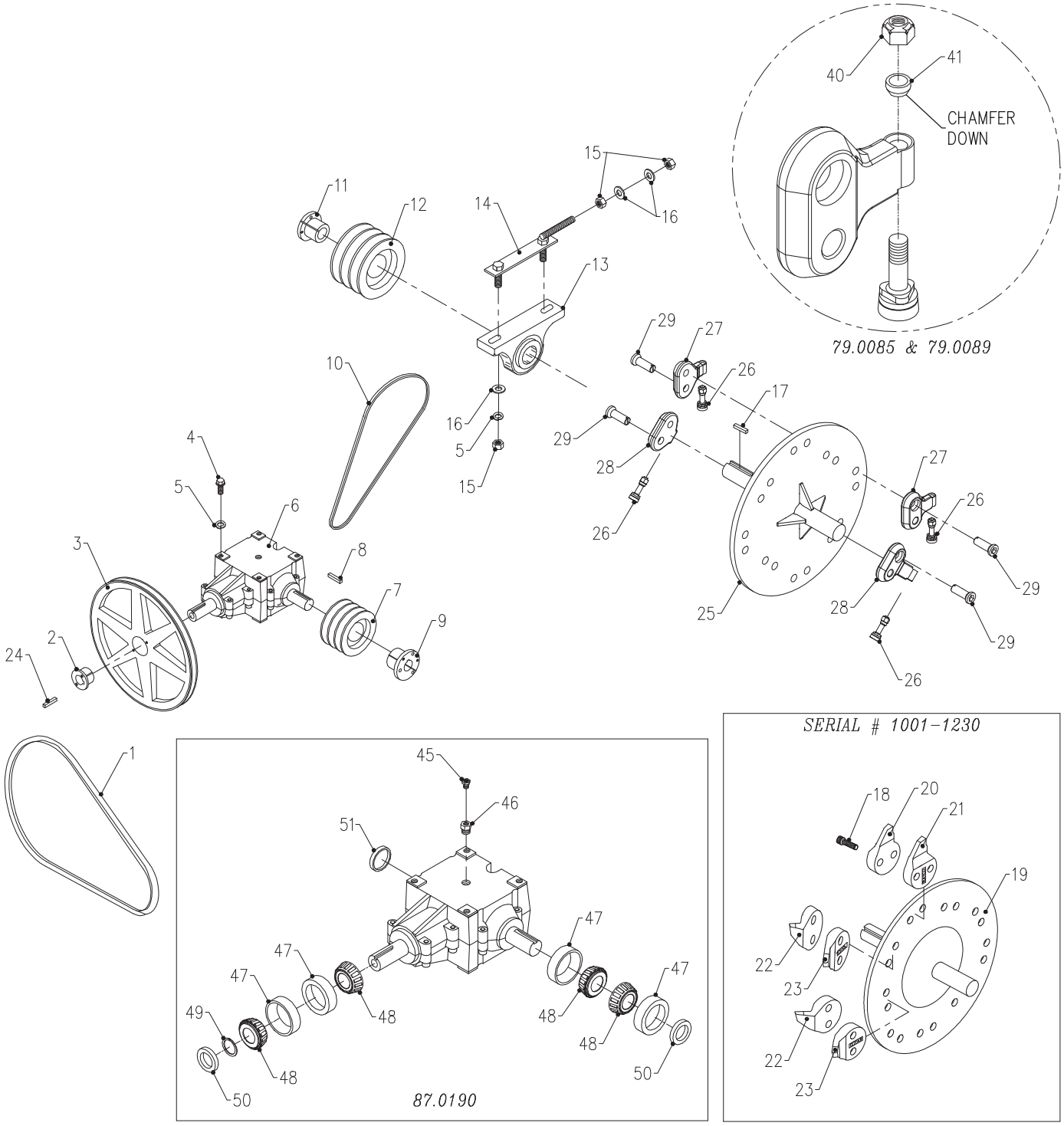

Use only original Ventrac replacement parts.

Drive & Pulleys

REF.	PART NO.	DESCRIPTION	QTY.
1	81.B053	BELT, B53	1
2	83.H20	BUSHING, 1 1/4” H	1
3	83.BK80H	PULLEY, 8” H-BUSH	1
4	90.0808	BOLT, 1/2-13 USS X 1	4
5	96.08	WASHER, LOCK 1/2	8
6	87.0190	GEARBOX, SUPERIOR KC180	1
7	83.3TB38	PULLEY, 3-GROOVE X 3.8” DIA	1
8	85.K0410	KEY, 1/4 X 1 1/4	1
9	83.P120	BUSHING, 1 1/4” P1	1
10	81.BX028	BELT, BX28	3
11	83.P123	BUSHING, 1 7/16” P1	1
12	83.3TB58	PULLEY, 3-GROOVE X 5.8” DIA	1
13	55.PB22023	BEARING, PILLOW BLOCK 1 7/16	2
14	42.0445	ADJUSTER, BELT TIGHTENER BKT	2
15	92.08	NUT, 1/2-13 USS	8
16	95.08	WASHER, FLAT 1/2 SAE	8
17	85.K0610	KEY, 3/8 X 1 1/4	1
18	99.K0090	BOLT, SHCS 5/8-18 SAE X 1-1/2 (Serial # 1001-1230)	18
19	80.0318	SHAFT, CUTTER ROTOR (Serial # 1001-1230)	1
20	79.0056	TOOTH, STRAIGHT C-BORED KC180 (Serial # 1001-1230)	3
21	79.0055	TOOTH, STRAIGHT TAPPED KC180 (Serial # 1001-1230)	3
22	79.0054	TOOTH, LEFT C-BORED KC180 (Serial # 1001-1230)	6
23	79.0053	TOOTH, RIGHT TAPPED KC180 (Serial # 1001-1230)	6
24	85.K030410	KEY, 3/16 X 1/4 X 1-1/4	1
25	80.0376	ROTOR, STUMPGRINDER KC180 (Serial # 1231-)	1
26	79.0085	TOOTH, DEEP DISH W/NUT (Serial # 1231-)	16
26	79.0089	TOOTH, STD DISH W/NUT (Optional Tooth)	16
27	79.0087	MOUNT, TOOTH STRAIGHT (Serial # 1231-)	8
28	79.0086	MOUNT, TOOTH ANGLED (Serial # 1231-)	8
29	99.K0114	BOLT, CUTTING TOOTH MOUNT (Serial # 1231-)	16
40	99.A06N	LOCKNUT, NYLON 3/8-16	1
41	64.1641	SPACER, CUTTING TOOTH	1
45	29.0093	PIPE, BREATHER PLUG 1/4	1
46	29.B0204G	PIPE, BUSHING 1/8 X 1/4 GALV	1
47	55.0078	BEARING, CUP 2.717	4
48	55.0077	BEARING, CONE 1.375	4
49	04.0027	RETAINING RING, EXT 1.375 SHFT	1
50	89.0082	SEAL, 1.375-2.00-313	2
51	89.0083	SEAL, END CAP 2.00-312	1

Use only original Ventrac replacement parts.

ILLUSTRATED DRAWING
Mirror Bracket

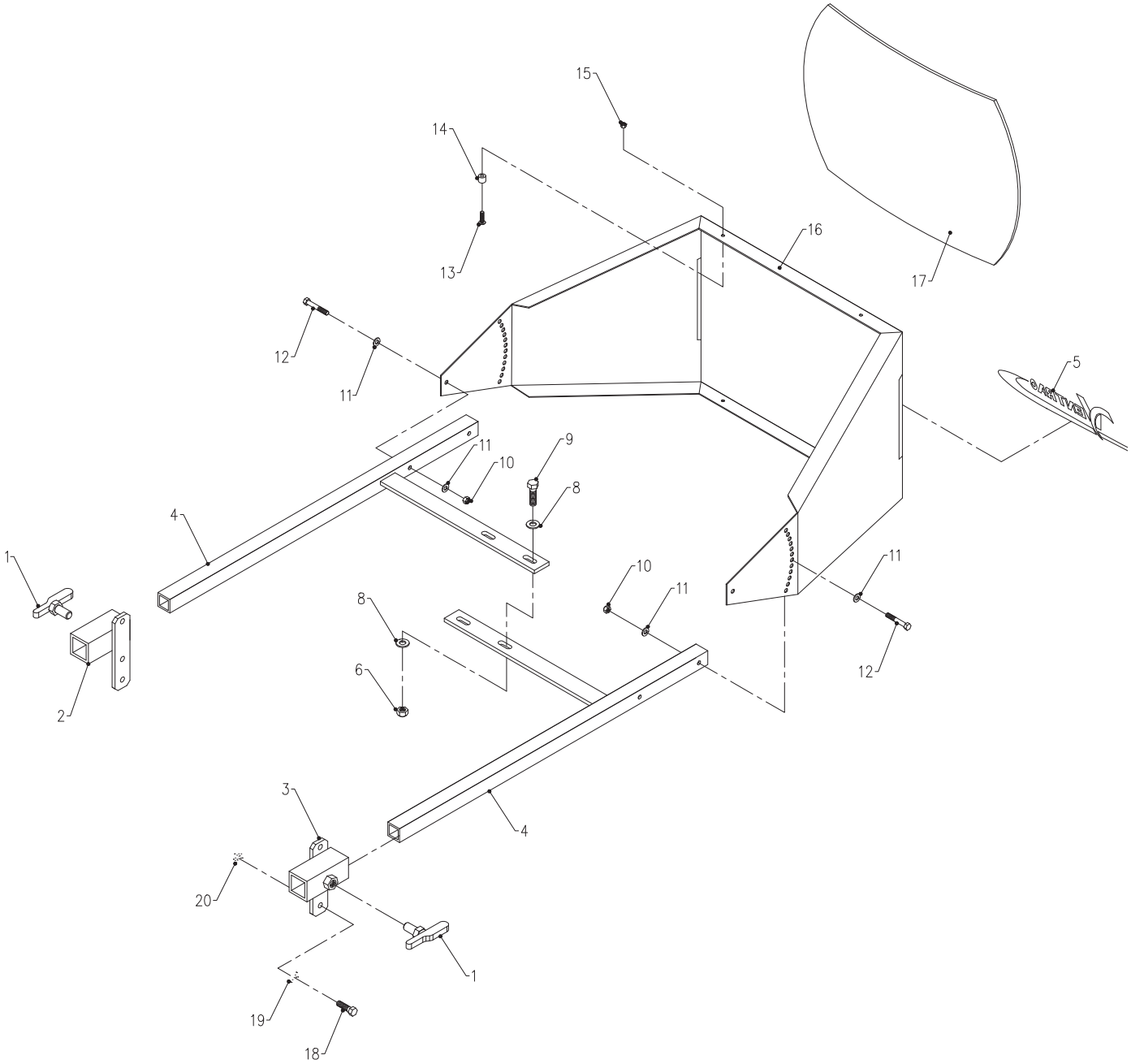

Use only original Ventrac replacement parts.

Mirror Bracket

REF.	PART NO.	DESCRIPTION	QTY.
1	64.0970	HANDLE, MIRROR BKT LOCK	2
2	64.0969	BRACKET, MIRROR MOUNT LEFT.	1
3	64.0968	BRACKET, MIRROR MOUNT RIGHT	1
4	62.0916	FRAME, MIRROR ARM	2
5	00.0189	DECAL, VENTRAC ORBITAL	1
6	99.A06	LOCKNUT, STOVER 3/8-16 USS	2
8	95.06	WASHER, FLAT 3/8 SAE	4
9	90.0610	BOLT, 3/8-16 USS X 1 1/4	2
10	99.A04	LOCKNUT, STOVER 1/4-20 USS	4
11	95.04	WASHER, FLAT 1/4 SAE	8
12	90.0412	BOLT, 1/4-20 USS X 1 1/2	4
13	99.K0062	MACHINE SCREW, #10-32 X 1/2	4
14	05.0084	BUMPER, CYLINDRICAL RUBBER.	4
15	99.A1032N	LOCKNUT, NYLON 10-32 STAINLESS	4
16	60.0821	FRAME, MIRROR MOUNT	1
17	47.0199	MIRROR, ACRYLIC LENS 18” X 12”	1
18	90.0508	BOLT, 5/16-18 USS X 1	6*
19**	95.05	WASHER, FLAT 5/16 SAE	6*
20**	99.SF05	NUT, SRF 5/16-18 USS	6*

*HT4000 uses 6) nuts and bolts. KT4100, KT4200, & KN4500 use 4) nuts and bolts.

**The nuts and some of the washers are reused from the power unit.

Use only original Ventrac replacement parts.

WARRANTY

LIMITED WARRANTY - VENTRAC TURF EQUIPMENT

Venture Products, Inc. (shall be referred to as V.P.I.) warrants on the terms and conditions herein, that it will repair, replace, or adjust any part manufactured by Venture Products Inc. and found by Venture Products Inc. to be defective in material and / or workmanship.

Effective September 1st 2005, Ventrac warranty on power units & attachments (excluding the HG100/HG150 generator) for **residential use only** is limited to **three (3) years** from original purchase date. Ventrac power units & attachments used **commercially or for any income-producing purpose** is limited to **two (2) years** from original purchase date. Ventrac ET200 turbine blower (turbine only) is limited to **two (2) years** from original purchase date. Ventrac HG100/HG150 generator is limited to **one (1) year** from original purchase date. Ventrac power units & attachments used for **rental** is limited to **180 days** from original purchase date. (**NOTE:** All accessories such as: 3-point hitch, foot pedal, dual wheel kit, etc. will be covered under the above warranty periods as they would apply provided they are installed by an authorized Ventrac dealer.) This warranty may be transferred and will carry the remainder of the warranty starting from the original purchase/registration date with the dealership and/or V.P.I. In the event that product/s originally registered as **(3) year residential use** are to be transferred to a commercial user, the warranty would change to the remainder of **(2) year commercial use** starting from the original purchase/registration date with the dealership and/or V.P.I.

If this warranty covers a consumer product as defined by the Magnusson-Moss warranty act, no warranties, express or implied, (including, but not limited to, the warranty of merchantability or fitness for a particular purpose) shall extend beyond the applicable time period stated in bold face type above.

If this warranty covers a product used commercially or for any income producing purpose, the foregoing warranties are in lieu of all other warranties and no representations, guarantees or warranties, express or implied, (including, but not limited to, a warranty of merchantability or fitness for a particular purpose), are made by V.P.I. in connection with the manufacture or sale of its products.

The engine warranty is covered by its respective engine manufacturer. Please refer to the engine manufacturer's warranty statement that is included in the owner's manual.

The Ventrac turf equipment, including any defective parts, must be returned to an authorized Ventrac dealer within the warranty period. The warranty shall extend to the cost to repair or replace (as determined by V.P.I.) the defective part. **The expense of pickup and delivery of equipment, service call drive time or any transportation expense incurred for warranty repair is the sole responsibility of the owner and is not covered under warranty by Ventrac and/or V.P.I.** V.P.I.'s responsibility in respect to claims is limited to making the required repairs or replacements, and no claim of breach of warranty shall be cause for cancellation or rescission of the contract of sale of any Ventrac equipment. Proof of purchase may be required by the dealer to substantiate any warranty claim. Only warranty work performed and submitted by an authorized Ventrac dealer may be eligible for warranty credit.

This warranty extends only to Ventrac turf equipment operated under normal conditions and properly serviced and maintained. The warranty expressly does **not** cover: (a) any defects, damage or deterioration due to normal use, wear and tear, or exposure; (b) normal maintenance services, such as cleaning, lubrication, oil change; (c) replacement of service items, such as oil, lubricants, spark plugs, belts, rubber hoses or other items subject to normal service replacement; (d) damage or defects arising out of, or relating to abuse, misuse, neglect, alteration, negligence or accident; (e) repair or replacement arising from operation of, or use of the turf equipment which is not in accordance with operating instructions as specified in the operator's manual or other operational instructions provided by V.P.I.; (f) repair or replacement arising as a result of any operation from Ventrac turf equipment that has been altered or modified so as to, in the determination of V.P.I., adversely affect the operation, performance or durability of the equipment

WARRANTY

LIMITED WARRANTY - VENTRAC TURF EQUIPMENT

or that has altered, modified or affected the turf equipment so as to change the intended use of the product; (g) repair or replacement necessitated by the use of parts, accessories or supplies, including gasoline, oil or lubricants, incompatible with the turf equipment or other than as recommended in the operator's manual or other operational instructions provided by V.P.I.; (h) repairs or replacements resulting from parts or accessories which have adversely affected the operation, performance or durability of the turf equipment; or (i) damage or defects due to or arising out of repair of Ventrac turf equipment by person or persons other than an authorized Ventrac service dealer or the installation of parts other than genuine Ventrac parts or Ventrac recommended parts.

The sole liability of V.P.I. with respect to this warranty shall be repair and replacement as set forth herein. V.P.I. shall have no liability for any other cost, loss, or damage. In particular V.P.I shall have no liability or responsibility for: (i) expenses relating to gasoline, oil, lubricants; (ii) loss, cost, or expense relating to transportation or delivery of turf equipment from the location of owner or location where used by owner to or from any authorized Ventrac dealer; (iii) travel time, overtime, after hours time or other extraordinary repair charges or charge relating to repairs or replacements outside of normal business hours at the place of business of an authorized Ventrac dealer; (iv) rental of like or similar replacement equipment during the period of any warranty repair or replacement work; (v) any telephone or telegram charges; (vi) loss or damage to person or property other than that covered by the terms of this warranty; (vii) any claims for lost revenue, lost profit or additional cost or expense incurred as a result of a claim of breach of warranty; or (viii) attorney's fees.

The remedies of buyer set forth herein are exclusive and are in lieu of all other remedies. The liability of V.P.I., whether in contract, tort, under any warranty, or otherwise, shall not extend beyond its obligation as set forth herein. V.P.I. shall not be liable for cost of removal or installation nor shall V.P.I. be responsible for any direct, indirect, special or consequential damages of any nature. In no event shall V.P.I. be liable for any sum in excess of the price received for the goods for which liability is claimed.

There are no representations or warranties which have been authorized to the buyer of the turf equipment other than set forth in this warranty. Any and all statements or representations made by any seller of this equipment, including those set forth in any sales literature or made orally by any sales representative, are superseded by the terms of this warranty. Any affirmation of fact or promise made by V.P.I. or any of its representatives to the buyer which relates to the goods that are the subject to this warranty shall not be regarded as part of the basis of the bargain and shall not be deemed to create any express warranty that such goods shall conform to the affirmation or promise.

No employee, distributor, or representative is authorized to change the foregoing warranties in any way or grant any other warranty on behalf of V.P.I.

Some states do not allow limitations on how long an implied warranty lasts or allow the exclusion on limitation of incidental or consequential damages, so the above limitation or exclusion may not apply to you.

This warranty gives you specific legal rights, and you may also have other rights which vary from state to state.

This warranty applies to all Ventrac turf equipment sold in the United States and Canada.