OWNER/OPERATOR'S MANUAL & PARTS LIST

TILLER

KL480

VENTRAC by Venture Products Inc.

Get Attached... Get it DONE!!!

minute MOUNT® attachments

Revised 01/07/10

09.10021

VENTRAC
VENTURE PRODUCTS INC

Orrville, OH

www.ventrac.com

TO THE OWNER

Product Identification

If you need to contact an Authorized Ventrac Dealer for information on servicing your product, always provide the Product Model and Serial numbers.

Please fill in the following information for future reference. See picture below to find the location of the identification number. Record them in the spaces provided below.

Date of Purchase: Month _____ Day _____ Year _____

Dealer: _____

Dealer Address: _____

_____

Dealer Phone Number: _____

Dealer FAX Number: _____

Model # (A): _____

Serial # (B): _____

Affix Part/Serial Number label here

Venture Products Inc. reserves the right to make changes in design or specifications without obligation to make like changes on previously manufactured products.

TABLE OF CONTENTS

INTRODUCTION — SECTION A

Description & Specifications A-1

SAFETY — SECTION B

Safety Symbols B-1
Decals B-2
General Safety Procedures B-3
Safety Operation & Techniques B-4

OPERATION — SECTION C

Attaching C-1
Detaching C-1
Operating Techniques & Tips C-1

MAINTENANCE/ADJUSTMENTS — SECTION D

Bearing Lubrication D-1
Gearbox Oil Level D-1

PARTS & ILLUSTRATED DRAWINGS — SECTION E

Main Frame & Shields . . . . . E-1 & 2
Gearbox & Belt Drive . . . . . E-3 & 4
Rotor & Chain Drive . . . . . E-5 & 6

WARRANTY

INTRODUCTION

Product Description
KL480 Tiller

The KL480 Tiller is an excellent attachment that allows quick and easy ground preparation for gardens or yards. Twenty-four tines are sequentially spaced to maximize the cutting force across the forty-eight inches of soil preparation.

The triple belt intermediate drive provides quiet operation and absorbs some of the shock that can result from working hard or stony ground. The #80 roller chain in a sealed final drive is lubricated for heavy duty performance.

Adjustable skid shoes facilitate a tilling depth up to six inches. The weight transfer control on the tractor can also be set to assist in the desired performance.

When not in use, a stand can be lowered to store the tiller in an upright position for easy re-attachment.

Ventrac KL480 Specifications

Overall Height	17 inches
Overall Length	41 inches
Overall Width	53 inches
Tilling Width	48 inches
Tilling Depth	6 inches
Weight	330 pounds

Venture Products, Inc. reserves the right to change these specifications without notice.

ATTENTION:

This symbol identifies potential health and safety hazards. It marks safety precautions. Your safety and the safety of others is involved.

SIGNAL WORD DEFINITIONS

⚠ DANGER

Indicates an imminently hazardous situation which, if not avoided, will result in death or serious injury. This signal word is limited to the most extreme cases.

⚠ WARNING

Indicates a potentially hazardous situation which, if not avoided, could result in death or serious injury.

⚠ CAUTION

Indicates a potentially hazardous situation which, if not avoided, may result in minor or moderate injury and/or property damage. It may also be used to alert against unsafe practices.

The following decals must be maintained on your Ventrac KL480 Tiller. If any decals are faded or missing, contact your dealer promptly for replacements.

A

B

C

D

Decal	Page & Location	Description	Part Number
A	E-1, #35	Danger - Shield Missing	00.0062
B	E-1, #34	Danger - Pinching Hazard	00.0102
C	E-1, #33	Danger - Keep Hands & Feet Away	00.0123
D	E-1 #30	Warning, Read Owner's Manual	00.0217

General Safety Procedures for Ventrac Tractors, Attachments, & Accessories

Read and understand the operator's manual before operating this equipment.

Observe and follow all safety decals.

DO NOT let children or any untrained person operate the tractor or attachment. Make sure that all operators of this equipment are thoroughly trained in using it safely.

Never allow additional riders on the tractor or attachments.

DO NOT operate tractor or attachments if you are under the influence of alcohol, drugs, or medication that may impair judgment or cause drowsiness, or if you are not feeling well.

Operate all controls from the operator's seat only.

Before operating equipment, make sure all shields are in place and fastened.

Ensure the attachment or accessory is locked or fastened securely to the tractor before operating. See tractor manual for locking procedure.

Ensure that all bystanders are clear of the tractor and attachment before operating. Be especially careful and observant if other people are present. Never assume that bystanders will remain where you last saw them.

Always look in the direction the tractor is moving.

Never direct the discharge of any attachment in the direction of people, animals, buildings, vehicles, or objects of value.

Stop operation immediately at any sign of equipment failure and correct the problem before continuing to operate. An unusual noise can be a warning of equipment failure or a sign that maintenance is required.

Before adjusting, cleaning, lubricating, or changing parts on the tractor or attachment, engage the parking brake, lower the attachment to the ground, stop the engine, and remove the ignition key.

To prevent the risk of uncontrolled equipment movement on tractors equipped with 2 speed axles, always shift the transaxle range with the tractor stationary on level ground and with the parking brake engaged.

If equipment is to be left unattended, engage the parking brake, lower the attachment to the ground, stop the engine, and remove the ignition key.

KL480 Safety Procedures

⚠ WARNING

Before making any repairs or adjustments, engage the parking brake, lower attachment to the ground, shut the engine off, and remove the key.

⚠ WARNING

Read and understand the operator's manual before operating this equipment.

Prior to tilling, clear the area to be tilled of any rocks, branches, string, or other debris that may clog the tiller.

OPERATION

Attaching

1. Drive the tractor slowly forward into the hitch arms on the tiller. Align the lift arms of the tractor with the tiller hitch arms by raising or lowering the front hitch and complete the engagement.
2. Once completely engaged, close the front hitch locking lever.*
3. Engage the parking brake* and shut off engine.
4. Place the attachment belt over the outside groove of the PTO drive pulley on the tractor. Ensure the belt is properly seated in each pulley.
5. Engage the PTO spring tension lever.*
6. Raise the tiller and rotate the stand to the operating position.

Detaching

1. Park the tractor on a level surface and set the parking brake.*
2. Shut off tractor engine.
3. Rotate the stand down and lower the tiller to the ground.
4. Disengage the PTO spring tension lever.*
5. Remove the attachment belt from the PTO drive pulley of the tractor.
6. Disengage the hitch locking lever.*
7. Restart tractor and slowly back away from the tiller.

* Refer to tractor manual for operation of controls..

Operating Techniques and Tips

Always shift the tractor into low range when operating the tiller.

The tiller is designed to be used with the tractor traveling in reverse.

Prior to tilling, the depth control shoes should be set for the desired depth. This is done with the tiller mounted on the tractor in the raised position and the tractor engine turned off with the key removed. Place a block under the tiller to prevent the tiller from lowering while adjustments are being made.

For best results, start tilling on your right and work to your left.

Operator must be sitting on the tractor seat **(4100 & 4200)** or seat belt must be fastened **(4000)** before the PTO can be engaged.

When at the desired starting location, start the tiller in the raised position and slowly lower the tiller into the ground. When tilling starts, begin to move the tractor in reverse and continue lowering the tiller until the depth control shoes contact the ground. At this point, push the SDLA lever into the float position and move at the appropriate speed allowed by soil conditions. When near the desired end of the row, slowly begin lifting the tiller out of the ground while the tractor is still moving. This will minimize the ditch at the end of the row.

If a rock or other piece of debris becomes jammed in the tiller, it may cause belts to slip or the tractor engine to stall. Shut off the PTO immediately. Lift the tiller out of the ground and place a block under it to prevent the tiller from lowering while you are cleaning it. Shut off the tractor engine and remove the key, before attempting to clean the tiller. Remove all debris from the tiller before restarting.

Grease the drive shaft and main rotor bearings every 25 hours. Do not over grease. Usually, one pump is sufficient.

Check gearbox oil every 100 hours or seasonally. If necessary, fill with 80-90 weight gear oil.

The drive chain is sealed in a lightweight type “00” grease and normally does not need additional lubrication.

Clear all debris from rotor after each use. Look for any bolts that may be sheared off or loose.

⚠ ATTENTION!! ⚠
Use only original Ventrac replacement parts.

PARTS MANUAL

ILLUSTRATED DRAWING
MAIN FRAME & SHIELDS

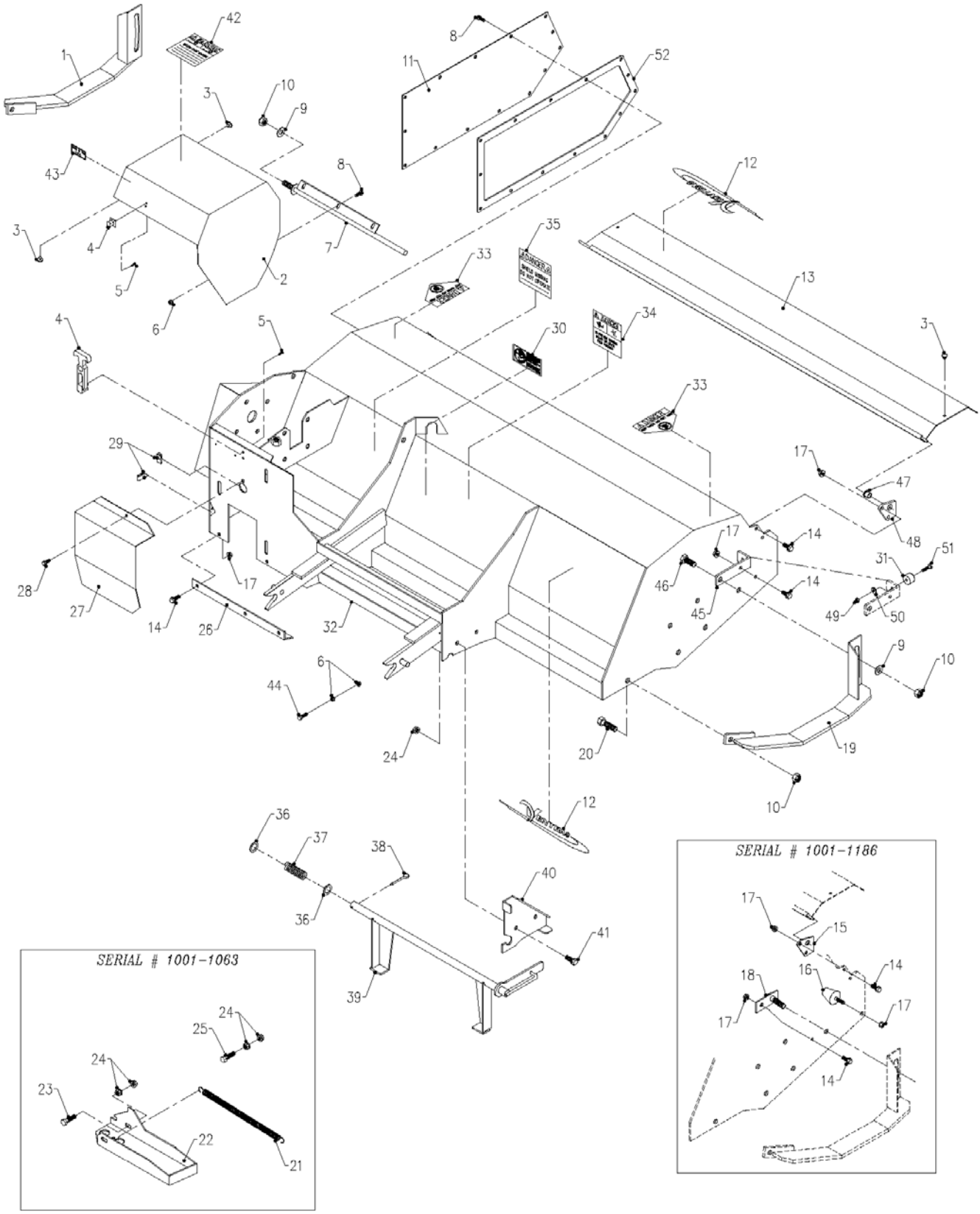

Use only original Ventrac replacement parts.

MAIN FRAME & SHIELDS

REF.	PART NO.	DESCRIPTION	QTY.
1	62.0896	SHOE, SKID LEFT KL480	1
2	60.0786	COVER, BELTS & GEARBOX KL480	1
3	05.0062	BUMPER, RUBBER SOLID STEM	6
4	47.0127	LATCH, RUBBER DRAW T-HANDLE	1
5	99.K0072	MACHINE SCREW, 10-24 X 1/2 ZP	3
6	99.SF04	NUT, SF 1/4-20 USS	5
7	42.0434	SHAFT, PIVOT - COVER KL480	1
8	99.SF0404-1	BOLT, SF 1/4-20 X 1/2 W/RUBBER	17
9	95.08	WASHER, FLAT 1/2 SAE	3
10	99.A08	LOCKNUT, STOVER 1/2-13 USS	5
11	60.0787	COVER, CHAIN KL480	1
12	00.0189	DECAL, VENTRAC ORBITAL	2
13	60.0785	FLAP, DIRT KL480	1
14	99.SF0506	BOLT, SF 5/16-18 USS X 3/4	9
15	64.0907	BRACKET, DIRT FLAP MOUNT KL480 (Serial # 1001-1186)	4
16	05.0061	BUMPER, RUBBER CONICAL (Serial # 1001-1186)	2
17	99.SF05	NUT, SF 5/16-18 USS	11
18	64.0911	BRACKET, SHOE ANCHOR KL480 (Serial # 1001-1186)	2
19	62.0895	SHOE, SKID RIGHT KL480	1
20	90.0808	BOLT, 1/2-13 USS X 1	2
21	41.0045	SPRING, 3/4 X 12 EXT .092-WIRE (Serial # 1001-1063)	1
22	60.0789	LEG, PARK KL480 (Serial # 1001-1063)	1
23	90.0612	BOLT, 3/8-16 USS X 1 1/2	3
24	99.SF06	NUT, SF 3/8-16 USS	8
25	90.0616	BOLT, 3/8-16 USS X 2	1
26	64.0906	STIFFENER, HOUSING KL480	1
27	60.0788	COVER, BELT KL480	1
28	99.SF0405-1	BOLT, SF 1/4-20 X 5/8 W/RUBBER	2
29	99.E0046	NUT, “U” 1/4-20 EXTRUDED	2
30	00.0217	DECAL, WARNING READ OWNERS MAN	1
31	05.0095	BUMPER, RUBBER CYLINDRICAL (Serial # 1187 -)	2
32	62.0893	FRAME, MAIN KL480	1
33	00.0123	DECAL, KEEP HAND AND FEET AWAY	2
34	00.0102	DECAL, DANGER-PINCHING HAZARD	1
35	00.0062	DECAL, DANGER SHIELD MISSING	1
36	95.12	WASHER, FLAT 3/4 SAE	2
37	41.0073	SPRING, COMP 13/16 ID X 2-1/2L (Serial # 1064 -)	1
38	02.CP0508	COTTER PIN, 5/32 X 1	1
39	62.1003	STAND, JACK KL480 (Serial # 1064 -)	1
40	60.0880	PLATE, JACK STAND MOUNTIN (Serial # 1064 -)	1
41	99.SF0606	BOLT, SF 3/8-16 USS X 3/4	2
42	00.0101	DECAL, HAZARD-MOVING PART	1
43	00.0100	DECAL, MADE IN USA	1
44	90.0414	BOLT, 1/4-20 USS X 1 3/4	1
45	64.1372	BRACKET, BUMPER (Serial # 1187 -)	2
46	90.0810	BOLT, 1/2-13 USS X 1 1/4	2
47	85.B0027	BUSHING, 1/2 ID X 5/8 OD X 5/8 (Serial # 1187 -)	2
48	64.1373	MOUNT, DIRT FLAP (Serial # 1187 -)	2
49	99.A04	LOCKNUT, STOVER 1/4-20 USS	2
50	95.04	WASHER, FLAT 1/4 SAE	2
51	90.0408	BOLT, 1/4-20 USS X 1	2
52	44.0268	GASKET, OIL SEAL (Serial # 1234-)	1

Use only original Ventrac replacement parts.

ILLUSTRATED DRAWING
GEARBOX & BELT DRIVE

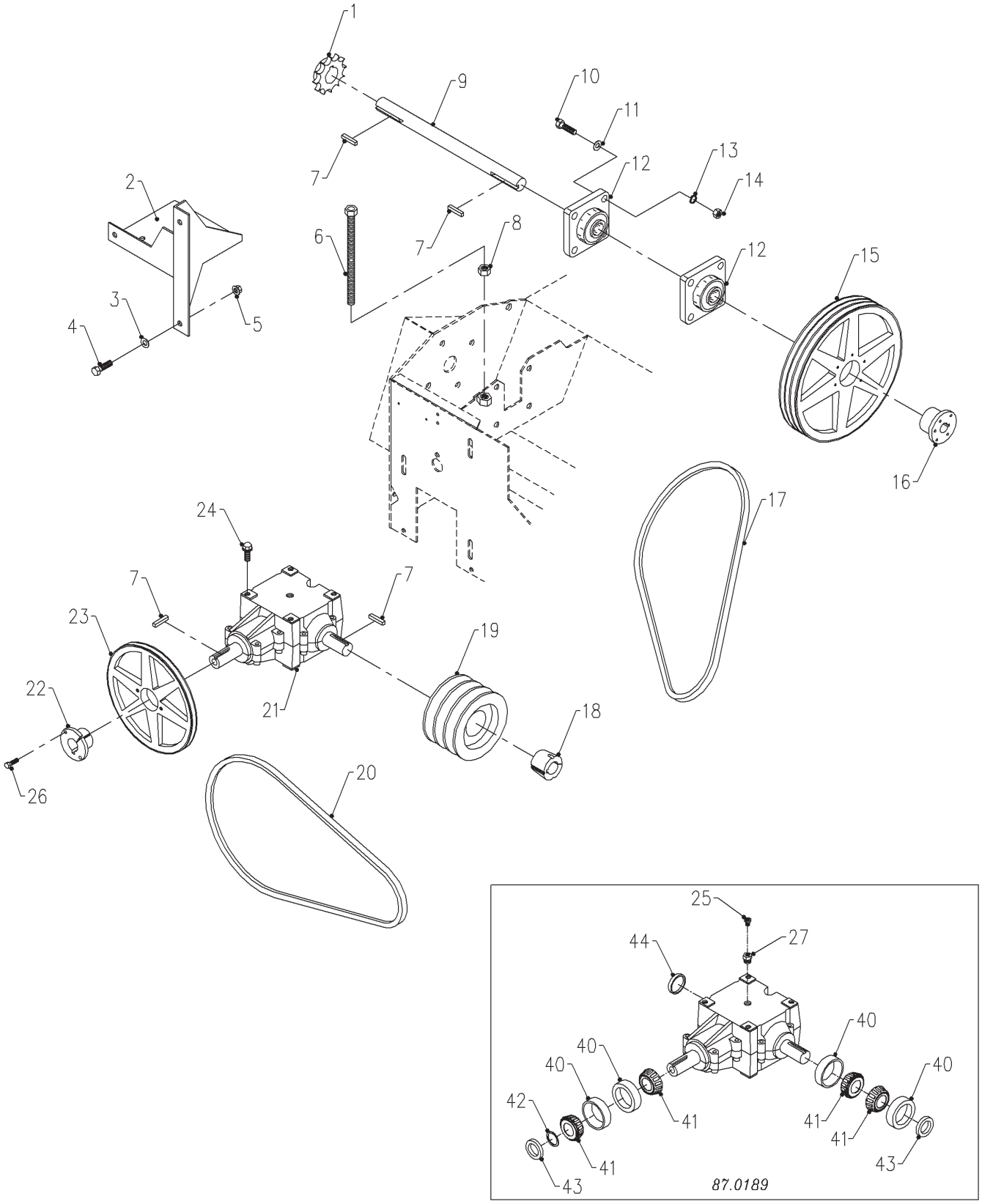

Use only original Ventrac replacement parts.

GEARBOX & BELT DRIVE

REF.	PART NO.	DESCRIPTION	QTY.
1	83.H800920	SPROCKET,#80 9-T HRD 1-1/4 BOR	1
2	62.0894	PLATE, GEARBOX MOUNT KL480	1
3	95.06	WASHER, FLAT 3/8 SAE	3
4	90.0606	BOLT, 3/8-16 USS X 3/4	3
5	99.SF06	NUT, SF 3/8-16 USS	3
6	42.0433	TIGHTNER, GEARBOX BELT KL480	1
7	85.K0410	KEY, 1/4 X 1 1/4	4
8	92.08	NUT, 1/2-13 USS	1
9	80.0311	SHAFT, JACK KL480	1
10	90.0712	BOLT, 7/16-14 USS X 1 1/2	8
11	95.07	WASHER, FLAT 7/16 SAE	8
12	55.FB22020S	BEARING, FLANGE 1-1/4S	2
13	96.07	WASHER, LOCK 7/16	8
14	92.07	NUT, 7/16-14 USS	8
15	83.3TB94	PULLEY, 3-GROOVE X 9.4" DIA	1
16	83.Q120	BUSHING, 1 1/4" Q1	1
17	81.BX035	BELT, BX35	3
18	83.121016	BUSHING, 1210 X 1" TAPERD LOCK	1
19	83.3TB36TB	PULLEY, 3B 3.6" TB-BUSHING	1
20	81.B066	BELT, B66	1
21	87.0189	GEARBOX, 1" SHAFT 2:1 CW/CCW (Serial # 1001-1168)	1
21	87.0219	GEARBOX, CW/CCW 1" SHAFT 2:1 (Serial # 1169-1228)	1
21	87.0189	GEARBOX, 1" SHAFT 2:1 CW/CCW (Serial # 1229-)	1
22	83.H16S	BUSHING, 1" SPLIT 1/4" KEY	1
23	83.BK80H	PULLEY, 8" H-BUSH	1
24	99.SF0608	BOLT, SF 3/8-16 USS X 1	4
25	29.0090	PIPE, BREATHER PLUG 1/8	1
26	90.0406	BOLT, 1/4-20 USS X 3/4	2
27	29.B0204G	PIPE, BUSHING 1/8 X 1/4 GALV	1
40	55.0076	BEARING, CUP 1.980	4
41	55.0075	BEARING, CONE 1.000	4
42	04.0026	RETAINING RING, EXT 1.000 SHFT	1
43	89.0075	SEAL, OIL	2
44	89.0081	SEAL, END CAP 1.50-25	1

Use only original Ventrac replacement parts.

ILLUSTRATED DRAWING
ROTOR & CHAIN DRIVE

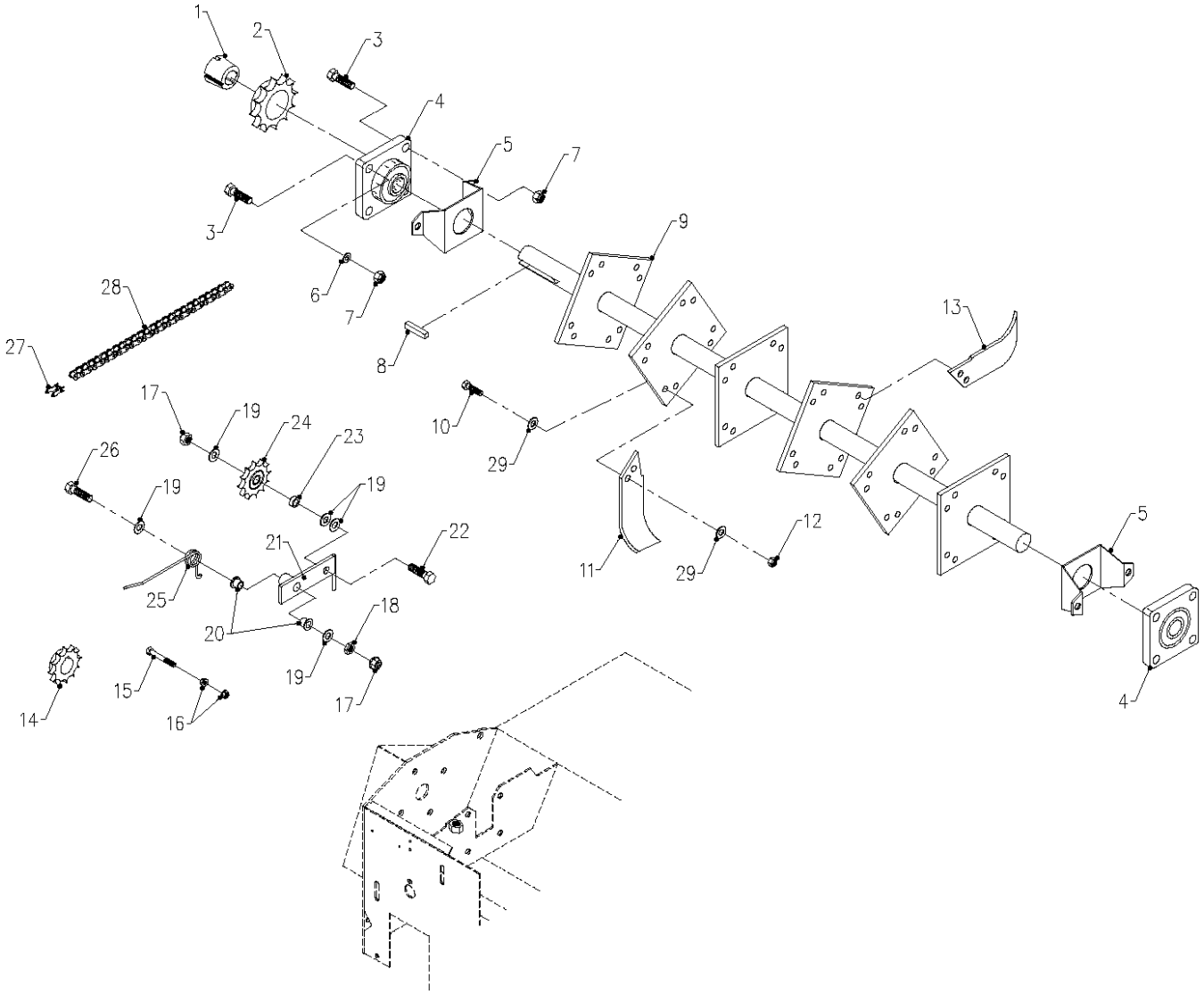

Use only original Ventrac replacement parts.

ROTOR & CHAIN DRIVE

REF.	PART NO.	DESCRIPTION	QTY.
1	83.161524	BUSHING, 1615 X 1-1/2 TAPERLOC	1
2	83.H80TB15	SPROCKET, #80 15-T HRD	1
3	90.0812	BOLT, 1/2-13 USS X 1 1/2	8
4	55.FB22024	BEARING, FLANGE BLOCK 1 1/2	2
5	64.0908	PROTECTOR, 1-1/2 BEARING KL.	2
6	95.08	WASHER, FLAT 1/2 SAE.	4
7	99.A08	LOCKNUT, STOVER 1/2-13 USS	8
8	85.K0610	KEY, 3/8 X 1 1/4	1
9	80.0310	SHAFT, MAIN ROTOR KL480	1
10	91.0712-8	BOLT, 7/16-20 SAE X 1-1/2 GRD8	48
11	79.0049-L	TINE, TILLER L.H.	12
12	99.A07NFN	LOCKNUT, NYLON 7/16-20 SAE	48
13	79.0049-R	TINE, TILLER R. H.	12
14	83.H800920	SPROCKET,#80 9-T HRD 1-1/4 BOR	1
15	90.0514	BOLT, 5/16-18 USS X 1 3/4	1
16	99.SF05	NUT, SF 5/16-18 USS	2
17	99.SF08	NUT, SF 1/2-13 USS	2
18	99.E0058	NUT, JAM 1/2-13 USS	1
19	95.08	WASHER, FLAT 1/2 SAE.	5
20	85.B0027	BUSHING, 1/2 ID X 5/8 OD X 5/8	2
21	40.0290	IDLER ARM, CHAIN KL480	1
22	90.0814	BOLT, 1/2-13 USS X 1 3/4	1
23	85.B0015	BUSHING, 1/2 ID X 3/4 OD X 1/2	1
24	83.8011012	SPROCKET, IDLER #80 11-T	1
25	41.0066	SPRING, SINGLE TORSION LH	1
26	90.0824	BOLT, 1/2-13 USS X 3	1
27	81.0059	LINK, CONN #80	1
28	81.0138	CHAIN, ROLLER #80 X 44" KL480	1
29	95.07	WASHER, FLAT 7/16 SAE	96

Use only original Ventrac replacement parts.

LIMITED WARRANTY – VENTRAC TURF EQUIPMENT

Venture Products, Inc. (shall be referred to as *V.P.I.*) warrants on the terms and conditions herein, that it will repair, replace, or adjust any part manufactured by *Venture Products* Inc. and found by *Venture Products Inc* to be defective in material and / or workmanship.

Effective September 1st 2005, *Ventrac* warranty on Tractors & Attachments (excluding the HG100/HG150 generator) for **Residential use only** is limited to **Three (3) years** from original purchase date. Ventrac Tractors & Attachments used **Commercially or for any income producing purpose** is limited to **Two (2) years** from original purchase date. *Ventrac* ET200 turbine blower (turbine only) is limited to **Two (2) years** from original purchase date. *Ventrac* HG100/HG150 generator is limited to **One (1) year** from original purchase date. *Ventrac* Tractors & Attachments used for **Rental** is limited to **180 days** from original purchase date. (**NOTE:** All accessories such as: 3-point hitch, foot pedal, dual wheel kit, etc. will be covered under the above warranty periods as they would apply provided they are installed by an Authorized *Ventrac* Dealer.) This warranty may be transferred and will carry the remainder of the warranty starting from the Original Purchase/Registration date with the dealership and/or *V.P.I.* In the event that product/s originally registered as **(3) year Residential use** are to be transferred to a commercial user the warranty would change to the remainder of **(2) year Commercial use** starting from the Original Purchase/Registration date with the dealership and/or *V.P.I.*

If this warranty covers a consumer product as defined by the Magnusson-Moss warranty act, no warranties, express or implied, (including, but not limited to, the warranty of merchantability or fitness for a particular purpose) shall extend beyond the applicable time period stated in bold face type above.

If this warranty covers a product used commercially or for any income producing purpose, the foregoing warranties are in lieu of all other warranties and no representations, guarantees or warranties, express or implied, (including, but not limited to, a warranty of merchantability or fitness for a particular purpose), are made by *V.P.I.* in connection with the manufacture or sale of its products.

The engine warranty is covered by its respective engine manufacturer. Please refer to the engine manufacturer's warranty statement that is included in the owner's manual.

The *Ventrac* turf equipment, including any defective parts, must be returned to an Authorized *Ventrac* Dealer within the warranty period. The warranty shall extend to the cost to repair or replace (as determined by *V.P.I.*) the defective part. **The expense of pickup and delivery of equipment, service call drive time or any transportation expense incurred for warranty repair is the sole responsibility of the owner and is not covered under warranty by *Ventrac and/or V.P.I.*** *V.P.I.'s* responsibility in respect to claims is limited to making the required repairs or replacements, and no claim of breach of warranty shall be cause for cancellation or rescission of the contract of sale of any *Ventrac* equipment. Proof of purchase may be required by the dealer to substantiate any warranty claim. Only warranty work performed and submitted by an Authorized *Ventrac* Dealer may be eligible for warranty credit.

This warranty extends only to *Ventrac* turf equipment operated under normal conditions and properly serviced and maintained. The warranty expressly does **NOT** cover: (a) any defects, damage or deterioration due to normal use, wear and tear, or exposure; (b) normal maintenance services, such as cleaning, lubrication, oil change; (c) replacement of service items, such as oil, lubricants, spark plugs, belts, rubber hoses or other items subject to normal service replacement; (d) damage or defects arising out of, or relating to abuse, misuse, neglect, alteration, negligence or accident; (e) repair or replacement arising from

operation of, or use of the turf equipment which is not in accordance with operating instructions as specified in the operator's manual or other operational instructions provided by *V.P.I.*; (f) repair or replacement arising as a result of any operation from Ventrac turf equipment that has been altered or modified so as to, in the determination of *V.P.I.*, adversely affect the operation, performance or durability of the equipment or that has altered, modified or affected the turf equipment so as to change the intended use of the product; (g) repair or replacement necessitated by the use of parts, accessories or supplies, including gasoline, oil or lubricants, incompatible with the turf equipment or other than as recommended in the operator's manual or other operational instructions provided by *V.P.I.;* (h) repairs or replacements resulting from parts or accessories which have adversely affected the operation, performance or durability of the turf equipment; or (i) damage or defects due to or arising out of repair of *Ventrac* turf equipment by person or persons other than an authorized *Ventrac* service dealer or the installation of parts other than genuine *Ventrac* parts or *Ventrac* recommended parts.

The sole liability of *V.P.I.* with respect to this warranty shall be repair and replacement as set forth herein. *V.P.I.* shall have no liability for any other cost, loss, or damage. In particular *V.P.I* shall have no liability or responsibility for: (i) expenses relating to gasoline, oil, lubricants; (ii) loss, cost or expense relating to transportation or delivery of turf equipment from the location of owner or location where used by owner to or from any Authorized *Ventrac* Dealer; (iii) travel time, overtime, after hours time or other extraordinary repair charges or charge relating to repairs or replacements outside of normal business hours at the place of business of an Authorized *Ventrac* Dealer; (iv) rental of like or similar replacement equipment during the period of any warranty repair or replacement work; (v) any telephone or telegram charges; (vi) loss or damage to person or property other than that covered by the terms of this warranty; (vii) any claims for lost revenue, lost profit or additional cost or expense incurred as a result of a claim of breach of warranty; or (viii) attorney's fees.

The remedies of buyer set forth herein are exclusive and are in lieu of all other remedies. The liability of *V.P.I.*, whether in contract, tort, under any warranty, or otherwise, shall not extend beyond its obligation as set forth herein. *V.P.I.* shall not be liable for cost of removal or installation nor shall *V.P.I.* be responsible for any direct, indirect, special or consequential damages of any nature. In no event shall *V.P.I.* be liable for any sum in excess of the price received for the goods for which liability is claimed.

There are no representations or warranties which have been authorized to the buyer of the turf equipment other than set forth in this warranty. Any and all statements or representations made by any seller of this equipment, including those set forth in any sales literature or made orally by any sales representative, are superceded by the terms of this warranty. Any affirmation of fact or promise made by *V.P.I.* or any of its representatives to the buyer which relates to the goods that are the subject to this warranty shall not be regarded as part of the basis of the bargain and shall not be deemed to create any express warranty that such goods shall conform to the affirmation or promise.

No employee, distributor, or representative is authorized to change the foregoing warranties in any way or grant any other warranty on behalf of *V.P.I.*

Some states do not allow limitations on how long an implied warranty lasts or allow the exclusion on limitation of incidental or consequential damages, so the above limitation or exclusion may not apply to you.

This warranty gives you specific legal rights, and you may also have other rights which vary from state to state.

This warranty applies to all *Ventrac* turf equipment sold in the United States and Canada.